东一阀门
TOP VALVES

东一阀门制造(南通)有限公司上海分公司
TOP VALVES MANUFACTURE (NENTONG) CO., LTD. SHANGHAI BRANCH

地址: 上海市长宁区天山路600弄4号25A
电话: 021-62569266

Add: Room 25A, No.4 Building, No.600 Tianshan Road, Changning Disctr. Shanghai, China
Tel: +86-21-62569266

注：由于本公司系列产品手册不断进行更新，本公司保留对说明书的修改权利，最终解释权归本公司所有。

Note: Since the company's series of product manuals are constantly updated, the company reserves the right to modify the specifications, the final interpretation right belongs to the company.

东一阀门制造(南通)有限公司
TOP VALVES MANUFASTURE (NANTONG) CO.,LTD.

地址: 江苏省启东市高新技术产业开发区东海路23号
电话: 0513-83833315
传真: 0513-83601092

Add: No.23, High-tech Industrial Development Zone, Qidong City, Jiangsu Province
Tel: +8513-83833315
Fax: +8513-83601092

http://www.top-gr.com
E-mail: sales@top-gr.com

高性能蝶阀
HIGH PERFORMANCE BUTTERFLY VALVES

东一阀门制造(南通)有限公司
TOP VALVES MANUFASTURE (NANTONG) CO.,LTD.

企业简介
Brief Introduction

东一阀门制造(南通)有限公司成立于2006年4月，注册资金8000万，注册商标“东一”，是阀门、传动机构等机电设备的专业研发生产型企业。公司位于江苏省启东市高新技术产业开发区东海路23号，占地50余亩，标准厂房15000m²，员工逾100人。是中国通用协会阀协会员单位、中核集团合格供应商，是国家及行业多项阀门标准的起草单位，已先后取得ISO9001、TS(中国特种设备制造许可A1级)、API、CE等认证。

东一阀门制造(南通)有限公司的管理、技术、生产核心团队由外籍及国内知名专家组成，在传承国内外先进成熟的工业阀门制造经验基础上，利用多渠道开展国际性技术研发与合作，吸收国内外先进技术精华，不断推出各种标准和特殊订制的高新技术流体控制产品，为客户提供优秀的全方位流体控制集成解决方案。

东一阀门南通工厂配备了CNC加工中心、CNC数控机床、立车、铣床、磨床等各式现代化机加工设备近100台，材料拉伸试验机、硬度计、光谱分析仪、超声波探伤、理化实验室、CL2500级超低温深冷试验装置等，检测试验设备与措施齐全完善，产品质量从原材料到生产到最终出厂的每一环节控制都得到了有力保障。

东一阀门的产品主要采用美国API、ANSI、英国BS、德国DIN、法国NF、日本JIS、JPI、中国GB等国际先进标准、可生产公称尺寸1/4"-80"(DN6-DN2000mm)，公称压力150LB-2500LB，工作温度-196℃～680℃的高性能蝶阀、蝶阀、闸阀、截止阀、球阀、止回阀、等；材料主要有球铁、碳钢、合金钢、不锈钢、双相不锈钢、司太立、蒙乃尔等；还可根据用户要求制造各种特殊阀门。

东一阀门南通公司成立以来，便以高效卓越的管理模式、雄厚强力的研发团队、精湛扎实的生产工艺、质量优异的可靠产品，博得众多国外品牌的青睐，成为其长期稳定的生产合作伙伴。基于对中国不断前进发展的信心，东一阀门已适时调整战略发展方向，在保持扩大与国外品牌合作的同时，大力拓展国内市场，为建设富强中国努力贡献！

TOP VALVE MANUFACTURING(NAN TONG) CO.,LTD was established in April 2006 with a registered capital of 80 million yuan and a registered trademark of "TOP". It is a professional r & D and production enterprise of valve, transmission mechanism and other mechanical and electrical equipment. The company is located in No. 23, Donghai Road, High-tech Industrial Development Zone, Qidong city, Jiangsu Province, covering an area of more than 50 mu, with a standard workshop of 15000m² and more than 100 employees. It is a member of China General Assembly Valve Association and a qualified supplier of China National Nuclear Corporation. It is the drafting unit of many national and industrial valve standards and has successively obtained ISO9001, TS(China Special Equipment Manufacturing License A1 level), API, CE and other certifications.

Company's management team, technicians and production core teams are all composed of well-known experts , on basis of mature industrial valve manufacturing experience at home and abroad,digesting and absorbing advanced technology, taking advantage of various channels to carry out technical cooperation and exchanges. After nearly 10 years of development and innovation, the formation of a series of water valve, high temperature, high pressure and low temperature valve series as the leading product structure, able to provide customers with comprehensive industrial valves integration solutions.

TOP VALVE MANUFACTURING(NAN TONG) CO.,LTD is equipped with 100 sets of modern processing machines such as CNC machining center, CNC machine tool,vertical milling machine, grinding machine. As well , Material tensile testing machine, hardness tester, spectrum analyzer, ultrasonic testing, physical and chemical laboratory, CL2500 class ultra-low temperature depth devoice have been applied. The whole series of equipment and devoice ensure the quality from raw material to delivery.

Company's products mainly based on API, ANSI, British BS, German DIN, French NF, Japanese JIS and JPI, China GB international advanced standards, with production sizes ranging from 1/4 "- 120" (DN8 - DN3000), pressure rating of 150Lb~900Lb, working temperature -196℃ ~ 680℃ for high performance butterfly valve, butterfly valve, gate valve, globe valve, ball valve, check valve, hydraulic control valves, etc.; Materials of construction are mainly ductile iron, carbon steel, alloy steel, stainless steel and various special materials to suit customer's requirements.
Since its establishment,TOP VALVE MANUFACTURING(NAN TONG) CO.,LTD has won the favor of many foreign brands and become its long -term stable production partner with its efficient and excellent management mode, strong and powerful research and development team, exquisite and solid production technology and reliable products with excellent quality. Based on the confidence of China's continuous development, TOP VALVE MANUFACTURING(NAN TONG) CO.,LTD has timely adjusted the strategic development direction, while maintaining the expansion of cooperation with foreign brands, vigorously expand the domestic market, and contribute to the construction of a prosperous and powerful China!

High Performance Butterfly Valves
高性能蝶阀

提供系统成套解决方案
Provide a complete set of Solutions

-阀门驱动装置及附件可配套安装,统一提供。
-可配套提供电动装置，蜗轮装置，双作用启动装置或弹簧回座启动装置，以及各种附件。包括限位装置，电磁阀和定位器。

-The valve actuator and accessories can be offered and installed.
-Electric actuator,worm gear actuator,dual action pneumatic actuator or spring return pneumatic actuator and various accessories including limit device, solenoid valve and positioner can be offered.


气动蝶阀
Pneumatic butterfly valve


光杆碳钢支耳式蝶阀
Light rod carbon steel ear butterfly valve


蜗轮碳钢对夹式蝶阀
Clip type butterfly valve for carbon steel of worm wheel


不锈钢手柄蝶阀
Stainless steel handle butterfly valve


双法兰蝶阀
Double flanged butterfly valve


碳钢高平台对夹式蝶阀
Carbon steel high platform pair clip butterfly valve

产品结构特征

高性能双偏心蝶阀，除常规阀门所适应的工况介质外，根据不同的介质，选用了不同结构材料和特殊处理材料，还可用于深冷、蒸汽、氯气、氧气、高真空、抗腐蚀等特殊工况。

Structural features of the product

High performance double eccentric butterfly valve, in addition to the conventional valve had to adapt to the working condition of the medium, according to different medium, chose different structure material and special processing, can also be used for cryogenic, vapor, chlorine gas, oxygen, high vacuum, corrosion and other special conditions.

阀门的整体结构
Integral structure of the valve

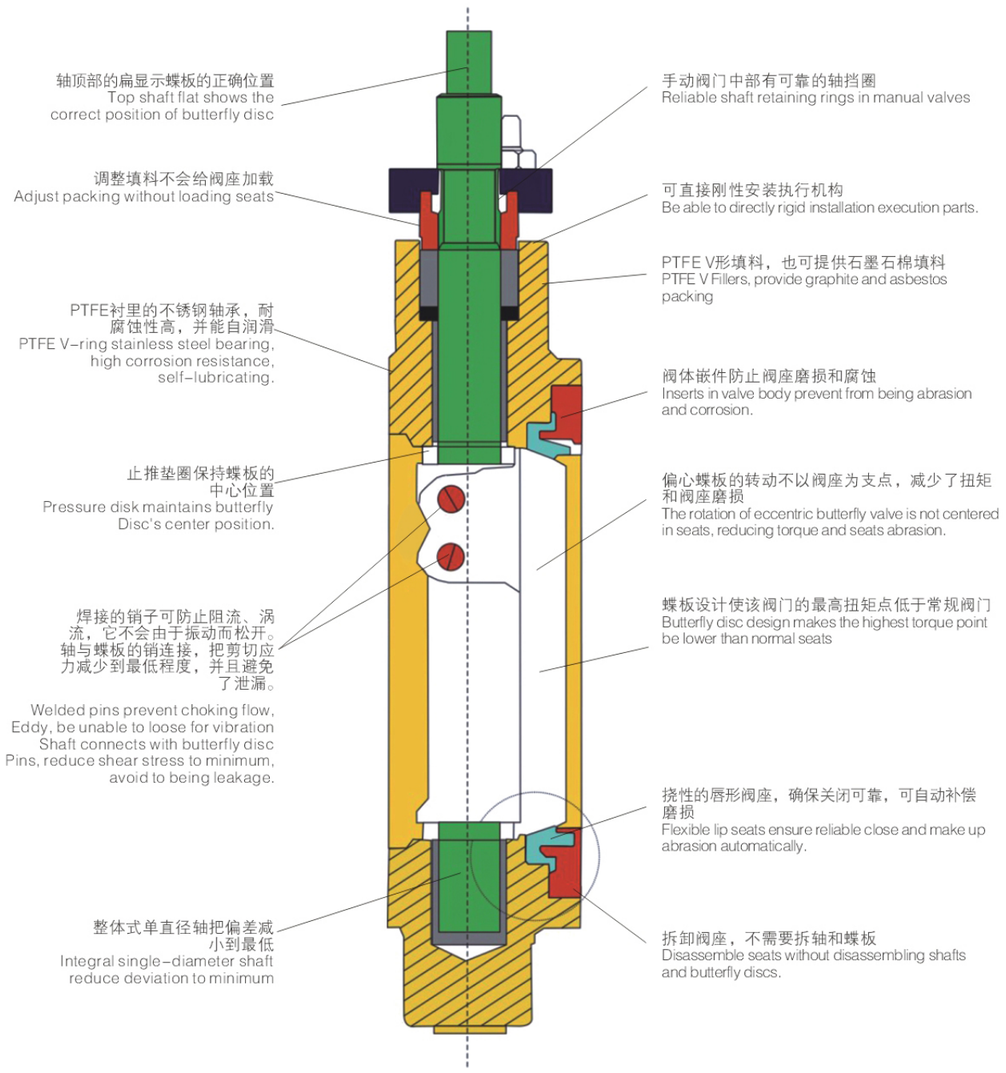

产品特点 Product features

耐火结构

耐火型阀门按API 607第4版和BS 6755第二部分经过火烧试验。

轴的固定可靠

2"-24"(DN50-600)轴的顶端装有固定环，在轴意外断裂时防止轴的上部移窜出压盖。

可提供CE标记的阀门

可提供符合欧共体压力容器规则(PED)97/23/EC，带CE标记和文件的阀门，阀门结构为ANSI 150级或300级标准型或防火型。其操作扭矩、结构选项和阀门尺寸正好与标准的ANSI 150级与300级相同。

阀座维修保养方便

只要取下嵌件即可更换阀座，不必拆卸蝶板和轴。

开关和控制兼备

1、具有优良的控制特性。
2、流量特性曲线等百分比变化。
3、调节范围广。
4、即使用于控制仍能紧密密封。
5、带凸耳的标准型单法兰蝶阀在整个压力温度范围内任一端均可用于管道终端。

成套供应，统一负责

1、阀门驱动装置及附件可配套安装，统一提供。
2、可配套提供电动装置，蜗轮装置，双作用气动装置或弹簧复位气动装置，以及各种附件，包括限位装置，电磁阀和定位器。
3、提供OEM服务。

提供多种材料选用

标准材料有球墨铸铁，铝青铜，碳钢，不锈钢，20合金，蒙乃尔等。还可根据用户要求选用其它材料。

Fire-proof structure

Fire-proof valve is tested to API 607 4th Edition and BS 6755 Part Ⅱ

Fixed axis

Fixed collar is installed in the top of axis, 2"-24"(DN50-600), when axis breaks accident, avoid the upper part to move out of gland.

Provide CE marked versions available

CE marked and documented valves that conform to the European Pressure Equipment Directive (PED) 97/23/EC are available in ANSI Class 150/300, both standard and Fire-Tite construction. Operating torques, construction potions and valve dimensions are exactly the same as the standard ANSI 150/300 offering.

Convenient to maintain and upkeep valve seats

Replace axis only by taking inserts down, without disassembling disc and axis.

Excellent for both On-Off and Control Application

1. Superior control characteristics.
2. Inherent flow characteristic is modified equal percentage.
3. Wide rangeability.
4. Tight shut-off even in control applications.
5. Standard lugged style valves are suitable for bidirectional dead-end service at the full pressure temperature rating of the valve.

Single-Source Responsibility

1. Purchase valves, actuators, and accessories, completely mounted from one source.
2. Available with electric, manual gear, and pneumatic double acting or spring return actuators and a variety of accessories including limit switch, solenoids, and positioners.
3. OEM service available through world-wide service centers.

Available in a Wide Choice of Material for a Broad Range of Applications

Standard body materials include ductile iron, aluminium bronze, carbon steel, stainless steel, Monel, Alloy 20. Users can also, according to requirements, select other materials.

额定值 Rating

150级815阀体的额定值，PSI
Rated value for class 150 body 815, PSI

温度 Temperature °F	碳钢* Carbon steel	球铁* Ductile iron	316不锈钢* Stainless steel	20合金* Alloy	蒙乃尔 Monel
-20~100	285	250	275	230	230
200	260	235	235	200	200
300	230	215	215	180	190
400	200	200	195	160	185
500	170	170	170	150	170
试验压力 Test pressure	450	400	425	350	250

300级830阀体的额定值，PSI
Rated value for class 300 body 830, PSI

温度 Temperature °F	碳钢* Carbon steel	316不锈钢* Stainless steel	20合金* Alloy	蒙乃尔 Monel
-20~100	740	720	600	600
200	680	620	520	530
300	655	560	465	495
400	635	515	420	480
500	600	480	390	475
试验压力 Test pressure	1125	1100	900	900

150级815阀体的额定值，巴
Rated value for class 150 body 815, bar

温度 Temperature °F	碳钢* Carbon steel	球铁* Ductile iron	316不锈钢* Stainless steel	20合金* Alloy	蒙乃尔 Monel
-20~38	19.7	17.2	19.0	15.8	15.8
93	17.9	16.2	16.2	13.8	13.8
149	15.8	14.8	14.8	12.4	13.1
204	13.8	13.8	13.4	11.0	12.8
260	11.7	11.7	11.7	10.3	11.7
试验压力 Test pressure	31	27	29	24	24

300级830阀体的额定值，巴
Rated value for class 300 body 830, bar

温度 Temperature °F	碳钢* Carbon steel	316不锈钢* Stainless steel	20合金* Alloy	蒙乃尔 Monel
-20~100	51	49.6	41.4	41.4
93	46.9	42.7	35.9	36.5
149	45.2	38.6	32.1	34.1
204	43.8	35.5	29.0	33.1
260	41.4	33.1	26.9	32.8
试验压力 Test pressure	77	75	62	62

技术参数

1. 阀座额定值

曲线表上表示的阀座额定值只对阀座而言，是基于阀门全闭时蝶板两端的压差。这些额定值可作为通用条件下的使用指南。依据以往经验。经过改进和变换其它阀座材料，使用的额定值可更高。

2. 阀体额定值

阀体的最大工作压力和各种材料阀体的试验压力示于下面的阀体压力额定值表中。实际工况使用压力要根据阀座额定值来决定。试验压力为蝶板开启时静压试验的压力。

Technical parameters

1. Valve seat ratings
Seat ratings are based on differential pressure with the disc in the fully closed position and refer to seats only. These ratings can be an operating guide in common conditions. In previous auctions, using improved or changed other valve seats materials have higher rated value.
2. Valve seat ratings
The tables below are maximum working pressure ratings of the valve body only. The seat ratings determine the practical pressure limitations according to actual service conditions. Test pressures are for hydostatic test with buttery disc open.

阀座额定值
Valve seat ratings

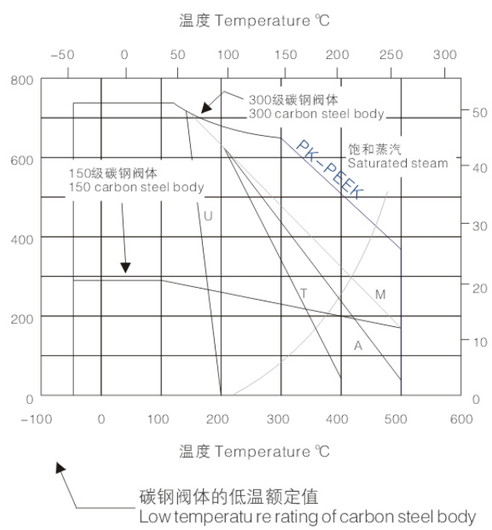

* 额定值符合ASME/ANSI B16.34-2004中的相应材料的额定值。球墨铸铁的额定值符合ASME/ANSI B16.42

* Rated value is according to corresponding materials' in ASME/ANSI B16.34-2004. The ratings of nodular cast iron accords with ASME/ANSI B16.42.

流量参数

下表提供了本样本815和830蝶阀的流量系数。Cv值表示压差为1磅/英寸(0.07巴)，温度为60℃ F(15.6℃)时每分钟流过全开启阀门的水流量，单位为美国加仑数/分钟。

830系列 Series		
阀门尺寸 Valve size		Cv
NPS	DN	
2	50	52
2 1/2	65	78
3	80	165
4	100	400
5	125	650
6	150	1050
8	200	1800
10	250	3150
12	300	4750
14	350	5200
16	400	6900
18	450	9300
20	500	11300
24	600	18500
30	750	29100
36	900	47500

1.T-PTFE 2.M-增强PTFE 3.PL-PPL 4. PK-PEEK 5.A-耐火阀座注意:316不锈钢，20号合金或哈氏合金为阀杆的14"-60"(DN350-1500)的150级阀门的最大压差为150psi(10.35巴)。316不锈钢，20号合金或哈氏合金为阀杆的3"-36"(DN80-900)的300级阀门的最大压差为300psi(20.7巴)。

Flow data

The tables below provide flow coefficients for Series 815 and 830 buttery valves covered in this bulletin, The Cv values represent the number of gallons perminute of 60° F(15.6℃) water that flows through a fully open valve with gallon one minute.

830系列 Series		
阀门尺寸 Valve size		Cv
NPS	DN	
2	50	52
2 1/2	65	78
3	80	165
4	100	400
5	125	650
6	150	1050
8	200	2200
10	250	3300
12	300	5100
14	350	5800
16	400	8000
18	450	10500
20	500	14000
24	600	21600
30	750	34000
36	900	55500
42	1050	82650
48	1200	108300
54	1350	133500
60	1500	159000

1. T-PTFE 2. M-Reinforced PTFE 3. PL-PPL 4. PK-PEEK 5. A-fireproofing valve seat.
Notes: 14"-60" (DN350-1500) Class 150 valves equipped with 316 stainless, Alloy 20 or Hastelloy C shafts are rated for maximum differential pressure of 150 psi (10.35 bar). 3"-36"(DN80-900)Class 300 valves equipped with 310 stainless, Alloy 20 or Hastelloy C shaft are rated for maximum differential pressure of 300 psi (20.7 bar)

流量参数(续)

为确定中间位置阀门的Cv值：
(1)从曲线表中确定最大Cv值的百分率
(2)将曲线表中的最大CV值的百分率乘以流量数据表中的Cv值
如：6"(DN150)815蝶阀70%开度时的Cv值为：
(1)从曲线表中确定6"(DN150)815蝶阀70%开度时的最大Cv值的百分率为53%
(2)53%的最大Cv值为，Cv值=0.53×1050=560

Flow data (additional)

To determine Cv values for a value in an intermediate position:
(1) Determine the percent of maximum Cv from the graph.
(2) Multiple the percent of maximum Cv shown on the graph by the Cv value from the appropriate.
Example: the Cv for a 6" (DN150) 815 that is 70% open is:
(1) From the graph, a 6" (DN150)815 that is 70% open has a Cv value that is 53% of the maximum CV.
(2) 53% of the maximum Cv=0.53×1050=560

多种阀座结构可选

PEEK密封性能
PEEK密封寿命长，性能高，适用广。PEEK是一种独特的密封材料，以氟聚合物为基本的复合材料。

Various optional seats

PEEK seal performance
PEEK seals provide longer life, expanded performance boundaries, and greatest possible value. PEEK is a unique material that is a fluoropolymer-based blend proprietary.

标准阀座密封

本蝶阀的标准阀座密封使用PTFE，增强PTFE和超高分子量的聚乙烯为材料。设计为唇式结构，不管流体的方向如何。变形后能恢复到原先的位置与蝶板保持密封。

Standard seats

This butterfly valve standard seat seal is constructed by PTFE, filled PTFE and UHMW Polyethylene, utilizes a flexible lip, which, when distorted, will always attemptto return to its original shape and maintain a seal against the disc regardless of flow direction.

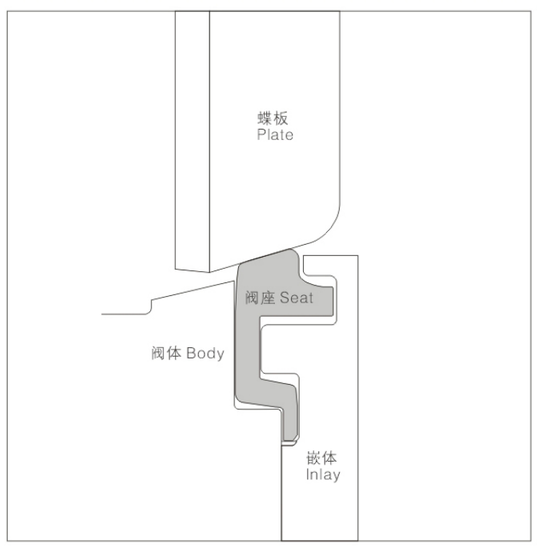

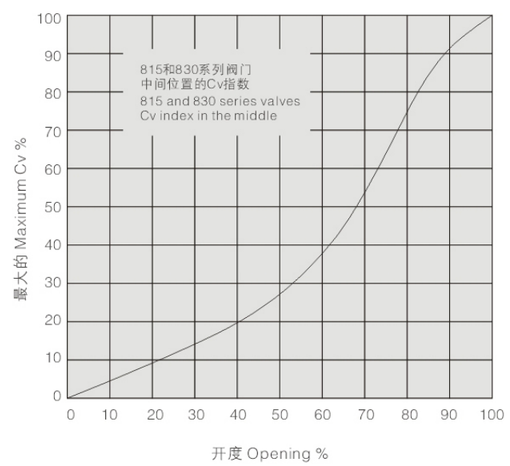

阀门关闭时蝶板使阀座稍稍变形。这一变形“激励”了阀座。阀座密封面的激励使它与蝶板的边缘保持持久的密封。

When the valve is shut, the disc slightly deflects the seat. This slightly deflection "energnizes" the seat. While energized, the sealing surface of the seat is constantly pushing against the edge of the disc.

阀座密封

ANSI/FCI 70-2规定了控制阀的泄漏等级和试验程序。其VI级为最低泄漏等级。高性能对夹式蝶阀能达到MSS-SP61规定的无气泡密封，要高于VI级。

Seat Tightness

ANSI/FCI 70-2 establishes a series of leakage classes for control valves and defines the test procedures. Class VI allows the least leakage, High performance butterfly valves are bubble-tight, MSS-SP61, which would exceed Class VI requirements.

耐火阀座

耐火阀座是考虑在火烧时需要有效关闭时使用的。是以金属座圈镶嵌PTFE等材料，PTFE作为首道密封。当PTFE烧坏时，金属座圈作为第二道密封进行有效的关闭。耐火阀座也适用于关键的或严峻的使用工况。带耐火阀座的阀门按API 607第4版和BS 6755第二部分经过试验并获得认可。

Fire-tight seats

The fire-tight seat was developed for applications where effective shut-off during a fire is a concern. The primary sealing element is PTFE with back-up metal seat ring. In the event that the PTFE is destroyed, the secondary metal seat provides effective shut-off. The Fire-tight seats have been tested and approved to API 607 Edition 4 and to BS 6755 Part II .

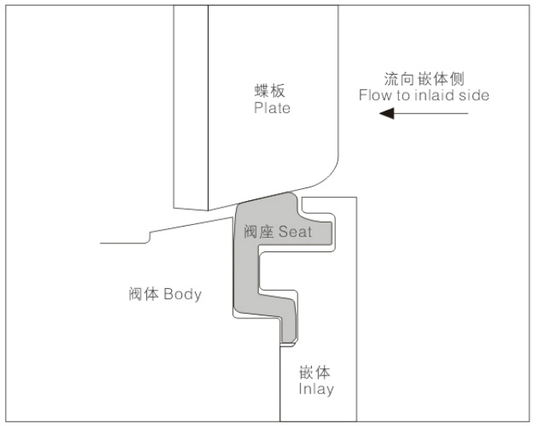

当嵌件侧受压时，压力被施加于唇缘的下方，进一步加大了蝶板与阀座之间的密封力。
When pressure is on the insert side, pressure is applied under the seat lip. This further amplifies the sealing force between the disc and the seat.

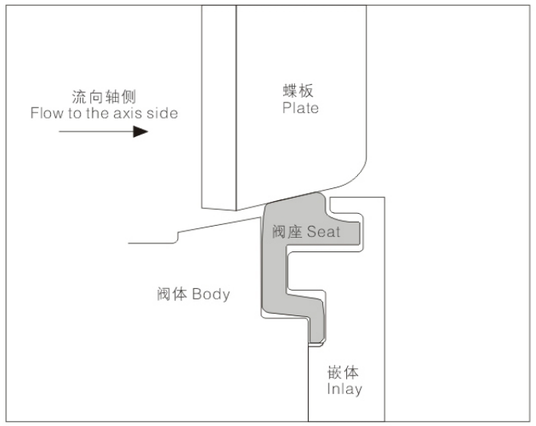

当压力施加于非嵌件的一侧时，蝶板被推向阀座。由于蝶板的轮廓呈球形，蝶板越向阀座推进，关闭就越紧密。唇缘与嵌件底部的槽接触，限制了阀座的过量移动。
When pressure is on the non-insert side, the disc moves into the seat. Due to the spherical profile of the disc, the more the disc moves into the seat, the tighterthe shut-off. Excessive movement of the seat is limited by the flexible lip which contacts the bottom of the groove in the insert ring.

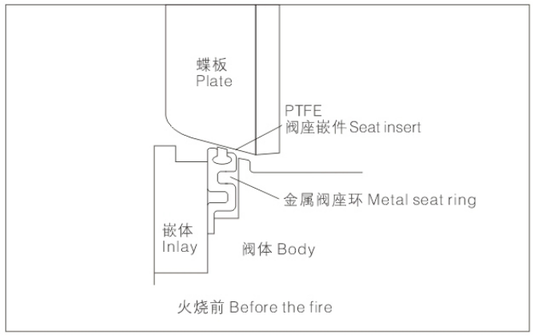

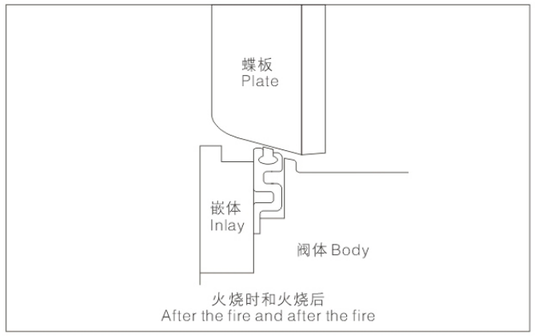

特殊工况的使用

动载密封–抑微泄盘根

为符合推行的防逸散泄漏标准需要加强对微泄漏的控制，本公司使用V形PTFE密封圈结构阀门，石墨密封圈和动载碟形弹簧垫圈，适用于耐火型阀门，它能保持恒定的密封力，不会造成过分压缩。它与新阀门配套，也可在现用的阀门上安装。另外还可提供双道密封以及带检测口的双道密封，通过检测口可以对头道密封进行检测以监视泄漏问题。订购特殊工况的阀门需要按订购说明作出标记。抑微泄盘根的阀门其扭矩增加请见扭矩数据。

蒸汽工况

本对夹式蝶阀，包括PTFE阀座的额定值较低的阀门到带PPL/PEEK阀座的阀门，适用于范围很广的蒸汽工况。在蒸汽工况作开关用的阀门额定值如下表所列，根据轴材料的选用，额定值会减低。

Special services

Emission–Pak–Loaded Packing

When enhanced emissions control needed to comply with evolving emissions standards, Emission–Pak live–loaded packing is available. The Emission–Pak live–loaded packing assembly includes PTFE V–ring packing live–loaded with disc spring washers for standard construction valves and graphite packing with Inconel disc springs for Fire–Tight valves to maintain a constant packing force without over–compression. It is available with new valves or as a retrofit kit for existing valves. Additional options, available with or without the Emission–Pak live–loaded packing, include double packing or double packing with monitoring port to facilitate testing of the primary seal and allow detection of a potential leak problem, Order valves for special services should be marked by order instructions. The operating torque of valves with Emission–Pak live–loaded packing increase refer to the torque data section.

Steam service

Butterfly valves are well–suited for a wide range of steam applications. These range from PTFE–seated valves capable of handling lower pressure to valves with PPL/PEEK seats, Ratings of valves in this bulletin for on–off steam service a re as follows: Valves may be derated based on shaft material selection.

阀门型号 Valve type	阀座材料 Seat material	最大压差 Maximum differential pressure	
		psi	bar
815W, 815L	PEEK	200*	14*
830W, 830L	PEEK	450	31

* 根据ASME/ANSI B16.34碳钢阀体在饱和蒸气温度的最大额定值。
* Max. rating of carbon steel body per ASME/ANSI B16.34 at corresponding saturated steam temperature.

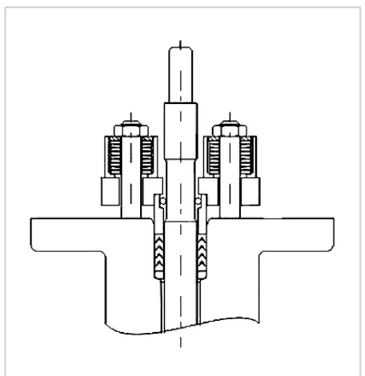

动载填料的密封 (抑微泄盘根)
live–loaded packing seal (Emission–Pak)

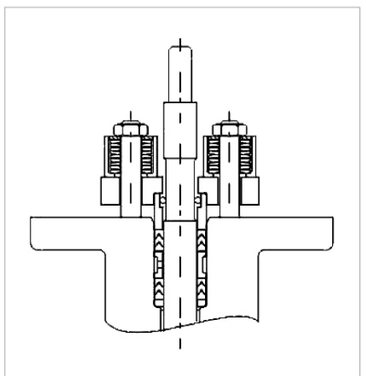

带双重填料的动载密封 (抑微泄盘根)
live–loaded seal with double packing seal (Emission–Pak)

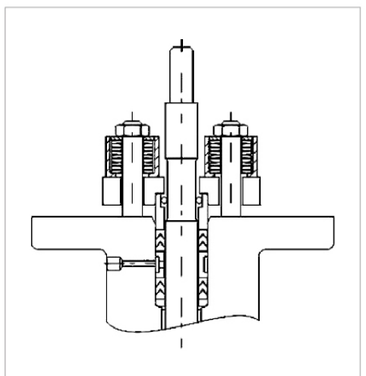

带双重填料和检测孔的动载 (抑微泄盘根)
live–loaded seal with double packing and monitoring port

操作手柄与驱动装置

对于小规格的蝶阀可选用手柄，所有手柄都具有自锁功能。对于高于下列值的压差建议使用蜗轮、气动或电动装置。

Operating handles and actuators

As an option, handles are available for smaller sizes of the butterfly valve. We recommend that manual–gear, pneumatic, or electric actuators be used at differential pressures higher than the values listed below. All handles have locking capability.

815系列/815 Series											
阀门尺寸 Valve size		阀门形式 Valve forms	最大压差 Maximum differential pressure				手柄长度 Handle length		手柄重量 Handle weight		手柄代码 Handle code
			815带T, M, U阀座 815with T, M, U seat		耐火阀座 Refractory seat						
NPS	DN		psi	bar	psi	bar	inches	mm	lb	kg	
2	50	815W/815L	285	19.7	285	19.7	11	279	3	1.3	012–H246–D
2 1/2	65	815W/815L	285	19.7	285	19.7	11	279	3	1.3	012–H246–D_1
3	80	815W/815L	285	19.7	285	19.7	11	279	3	1.3	012–H246–D_1
4	100	815W/815L	285	19.7	285	19.7	11	279	3	1.3	012–H246–D_1
5	125	815W/815L	150	10.3	–	–	11	279	3	1.3	012–H246–D_1
6	150	815W/815L	150	10.3	–	–	11	279	3	1.3	012–H246–D_2
8	200	815W/815L	150	10.3	–	–	22	559	15	6.8	012–H246–D_1
10	250	815W/815L	50	3.4	–	–	22	559	15	6.8	012–H246–D_2
12	300	815W/815L	50	3.4	–	–	22	559	15	6.8	012–H246–D_3

830系列/830 Series											
阀门尺寸 Valve size		阀门形式 Valve forms	最大压差 Maximum differential pressure				手柄长度 Handle length		手柄重量 Handle weight		手柄代码 Handle code
			815带T, M, U阀座 815with T, M, U seat		耐火阀座 Refractory seat						
NPS	DN		psi	bar	psi	bar	inches	mm	lb	kg	
2	50	830W/830L	300	20.7	–	–	11	279	3	1.3	012–H246–D
2 1/2	65	830W/830L	300	20.7	–	–	11	279	3	1.3	012–H246–D_1
3	80	830W/830L	300	20.7	300	20.7	11	279	3	1.3	012–H246–D_1
4	100	830W/830L	300	20.7	300	20.7	11	279	3	1.3	012–H246–D_1
5	125	830W/830L	300	20.7	–	–	11	279	3	1.3	012–H246–D_2
6	150	830W/830L	150	10.3	–	–	22	559	15	6.8	012–H246–D_1
8	200	830W/830L	150	10.3	–	–	22	559	15	6.8	012–H246–D_2
10	250	830W/830L	50	3.4	–	–	22	559	15	6.8	012–H246–D_3

阀门扭矩

815和830系列的开启与关闭扭矩可按下面的公式计算。为了方便起见，可使用下表来迅速选择驱动装置。如果阀门的扭矩在表中没有，则可用公式进行计算，选择可提供相同或更大的扭矩的驱动装置。如有疑问，可选择较大的。

Valve Torque

The torque required to open or close the series 815 and series 830 can easily be calculated using the equation on the following page. However, for your convenience, thee following tables can be used as a quick guide for actuator selections. If the valve's torque is not listed in the tables, use the equation to calculate the torque. Select an actuator that provides the same or greatest torque output than the valve's torque. If in doubt, select the next larger actuator.

阀门尺寸 Valve size		815系列扭矩，轴处于下游T, M, PPL, PK 阀座 815 series torque, the shaft is downstream T, M, PPL, PK seat					
		关闭压差 Shut down the differential					
NPS	DN	lb–ft@ 100 psi	Nm@ 6.9 bar	lb–ft@ 200 psi	Nm@ 13.8 bar	lb–ft@ 285 psi	Nm@ 19.7 bar
2	50	16	23	18	24	19	26
2 1/2	65	21	29	23	31	24	33
3	80	25	34	27	37	29	39
4	100	35	47	39	39	43	58
5	125	48	65	56	56	63	86
6	150	72	97	83	113	93	126
8	200	121	164	142	193	160	217
10	250	163	222	202	274	234	318
12	300	214	290	287	390	350	475
14	350	362	491	505	684	626	849
16	400	463	628	646	876	802	1087
18	450	602	816	844	1144	1050	1423
20	500	810	1098	1140	1546	1421	1926
24	600	1234	1673	1758	2384	2200	2983
30	750	2170	2942	2940	3986	3595	4873
36	900	3530	4786	4860	6589	5990	8121
42	1050	5780	7837	8060	10928	10000	13558
48	1200	9170	12433	12840	17409	15960	21638
54	1350	12950	17558	17900	24269	22110	29977
60	1500	19020	25790	26040	35310	32000	43397

阀门尺寸 Valve size		F815系列扭矩，轴处于下游或上游，防火阀座 F815 series torque, taxial downstream or upstream, fire seat					
		关闭压差 Shut down the differential					
NPS	DN	lb–ft@ 100 psi	Nm@ 6.9 bar	lb–ft@ 200 psi	Nm@ 13.8 bar	lb–ft@ 285 psi	Nm@ 19.7 bar
2	50	33	44	35	47	37	50
2 1/2	65	42	57	45	61	47	64
3	80	53	72	57	77	59	81
4	100	67	91	74	100	80	108
5	125	97	132	114	155	128	174
6	150	131	178	152	206	170	230
8	200	218	296	256	347	288	391
10	250	333	452	406	550	468	635
12	300	508	689	636	826	745	1010
14	350	604	819	758	1028	889	205
16	400	710	963	920	1247	1099	1489
18	450	970	1315	1370	1857	171O	2318
20	500	1390	1885	1980	2685	2482	3364
24	600	2050	2779	2700	3661	3353	4410
30	750	2920	3959	3940	5342	4807	6517
36	900	3530	4786	4960	6725	6176	8373
42	1050	5620	7620	7440	10087	8987	12185
48	1200	8800	11931	12100	16405	14905	20208

阀门尺寸 Valve size		815系列扭矩，轴处于下游T, M, PPL, PK 阀座 815 series torque, the shaft is downstream T, M, PPL, PK seat											
		关闭压差 Shut down the differential											
NPS	DN	lb–ft@ 300 psi	Nm@ 20.7 bar	lb–ft@ 400 psi	Nm@ 27.6 bar	lb–ft@ 500 psi	Nm@ 34.5 bar	lb–ft@ 600 psi	Nm@ 41.4 bar	lb–ft@ 700 psi	Nm@ 48.3 bar	lb–ft@ 740 psi	Nm@ 51 bar
2 1/2	65	25	34	27	36	30	41	33	45	35	47	36	49
3	80	31	42	34	46	38	51	41	55	44	60	45	62
4	100	52	70	58	79	65	88	72	97	78	106	81	110
5	125	85	115	98	132	112	151	125	169	138	186	143	193
6	150	119	161	138	188	158	214	178	241	197	267	205	278
8	200	231	313	271	368	312	422	352	477	392	532	408	554
10	250	35	480	422	572	490	664	557	756	625	848	652	885
12	300	492	667	582	790	673	913	764	1035	854	1158	890	1207
14	350	824	1117	1012	1372	1200	1627	1388	1882	1576	2137	1651	2239
16	400	989	1340	1212	1643	1435	1946	1658	2248	1881	2550	1970	2671
18	450	1279	1734	1562	2118	1845	2520	2128	2885	2411	3269	2524	3422
20	500	1707	2314	2092	2842	2485	3369	2874	3897	3263	4424	3419	4635
24	600	2309	3131	2832	3840	3355	4549	3878	5258	4401	5967	4610	6251
30	750	4210	5708	5080	6888	5950	8067	6820	9247	7690	10426	8038	10898
36	900	7220	9789	8760	11877	10300	13965	11840	16053	13380	18141	13996	18976

阀门扭矩(续)
Valve Torque (additional)

阀门尺寸 Valve size		F830系列扭矩，轴处于上游或下游，防火阀座 F830 series torque, axial upstream or downstream, fireproof seat											
		关闭压差 Shut down the differential											
NPS	DN	lb–ft@ 300 psi	Nm@ 20.7 bar	lb–ft@ 400 psi	Nm@ 27.6 bar	lb–ft@ 500 psi	Nm@ 34.5 bar	lb–ft@ 600 psi	Nm@ 41.4 bar	lb–ft@ 700 psi	Nm@ 48.3 bar	lb–ft@ 740 psi	Nm@ 51 bar
3	80	57	77	58	79	60	81	61	83	63	85	63	86
4	100	86	117	94	127	102	138	110	149	118	160	121	164
6	150	189	256	212	287	235	319	258	350	281	381	290	394
8	200	313	424	354	480	395	536	463	591	477	647	493	669
10	250	464	629	522	708	580	786	638	865	696	944	719	975
12	300	825	1119	960	1302	1095	1485	1230	1668	1365	1851	1419	1924
14	350	922	1250	1076	1459	1230	1668	1384	1877	1538	2085	1600	2169
16	400	1170	1586	1390	1885	1610	2183	1830	2481	2050	2779	2138	2899
18	450	1980	2685	2440	3308	2900	3932	3360	4556	3820	5179	4004	5429
20	500	2800	3796	3460	4691	4120	5586	4780	6481	5440	7376	5704	7734
24	600	4400	5966	5400	7321	6400	8677	7400	10033	8400	11389	8800	11931

扭矩公式

使用下述公式计算815和830系列阀门的开启与关闭扭矩。所需的扭矩(lb–ft)=(Kt关闭压差)+Ts

例如：在压差为230psi(15.9巴)，轴安装在下游的6"(DN150)815W–11–36HBMT阀门的扭矩=(0.116×230)+60=87英尺・磅英尺・磅换算成Nm，乘以1.356

Torque Equation

Use the following equation to calculate the torque required to open and close the series 815 and series 830 valves. Torque required (lb–ft)=(Kt multiplied by the shut–off differential pressure in psi)+Ts

Example: 6" (DN 150)815W–11–36HBMT at 230 psi (15.9bar) differential pressure. installed shaft downstream=(0.116 ×230)+60= 87 FT.LBS. to conved FT. LBS to N.m, multiply by 1.356

阀门尺寸 Valve size		150级 150 Grade					300级 300 Grade				
		815系列 Series, T, M, PPL, PK 阀座Seat			815系列防火 815 series fire protection		830系列 Series, T, M, PPL, PK 阀座Seat			830系列防火 830 series fire protection	
NPS	DN	Kt轴上游	Kt轴下游	Ts	Kt轴上游或下游	Ts	Kt轴上游	Kt轴下游	Ts	Kt轴上游或下游	Ts
2	50	0.013	0.011	15	0.018	32	0.024	0.020	14	–	–
2 1/2	65	0.017	0.014	20	0.024	40	0.027	0.026	17	–	–
3	80	0.021	0.021	23	0.033	50	0.034	0.033	21	0.015	52
4	100	0.046	0.046	30	0.07	60	0.068	0.066	32	0.08	62
5	125	0.105	0.081	40	0.17	80	0.130	0.125	47	–	–
6	150	0.156	0.116	60	0.21	110	0.203	0.196	60	0.23	120
8	200	0.301	0.211	100	0.38	180	0.423	0.403	110	0.41	190
10	250	0.584	0.384	125	0.73	260	0.689	0.679	150	0.58	290
12	300	0.847	0.737	140	1.28	380	1.106	0.906	220	1.35	420
14	350	2.034	1.424	220	1.54	450	2.28	1.88	260	1.54	460
16	400	2.88	1.83	280	2.1	500	3.21	2.23	320	2.2	510
18	450	3.65	2.42	360	4.0	570	3.94	2.83	430	4.6	600
20	500	4.72	3.30	480	5.9	800	5.01	3.89	540	6.6	820
24	600	7.34	5.24	710	6.5	1400	6.88	5.23	740	10	1400
30	750	11.2	7.7	1400	10.2	1900	9.4	8.7	1600	–	–
36	900	20.4	13.3	2200	14.3	2100	16.1	15.4	2600	–	–
42	1050	29.9	22.8	3500	18.2	3800	–	–	–	–	–
48	1200	43.7	36.7	5500	33	5500	–	–	–	–	–
54	1350	59.5	49.5	8000	–	–	–	–	–	–	–
60	1500	80.7	70.2	12000	–	–	–	–	–	–	–

注：使用抑微泄盘根动载填料的阀门Ts值要增加。带PTF E动载密封填料的阀门使用(Ts×1.06)，对于带石墨动载密封填料的阀门，使用(Ts×1.2 6)。

Note: the Ts value for a valve with Emission–Pak Live–Loaded Packing will increase. For valves with Live–Loaded PTFE shaft packing, use(Ts×1.06). For valves with Live–Loaded Graphite shaft packing, use(Ts×1.2 6).

标准和规范

本样本中的815和830系列阀门可以符合下述工业标准和规范

Standards and specifications

Series 815 and 830 valves covered in this bulletin are available to conform to the following industry standards and specifications.

公司质量体系标准

ISO9001-2015
PED2014/68/EC

The company product standard

ISO9001-2015
PED2014/68/EC

产品标准 Product standard

API 607	软密封阀门耐火试验 Fire rest for soft seated valves
BS 6755	英国阀门试验标准第二部分：耐火试验要求 British Standard testing of valves Part 2. Specification for fire type-testing requirements
API 609	双法兰、对夹式和凸耳式蝶阀，3"~24"，API 609未规定2½"和5" Double Flanged, Lug-and Water-Type 3"~24" only, 2½" and 5" and not defined in API 609
ANSI/ASME B16.10	铁素体类阀门面对面，端对端尺寸，ASME B16.10未规定2½"和5" Face-to-Face and End-to-End Dimensions of Ferrous Valves 3"~24" only, 2½" and 5" and not defined in API 609
ANSI/ASME B16.5	钢管法兰和法兰连接件，3"~24" Steel Pipe Flanges and Flanged Fittings 3"~24" only
ANSI/ASME B16.47	NPS26-NPS60大口径钢法兰 Large Diameter Steel Flanges NPS 26 through NPS 60
ANSI/ASME B16.34	法兰端和对焊端钢制阀门 Flange end and butt end steel valve
ANSI/ASME B31.1	发电厂管道 Power plant pipeline
ANSI/ASME B31.3	化工厂和炼油厂管道 Chemical Plant and Petroleum Refinery Piping
ANSI/ASME B31.4	无水氨和酒精，碳氢化合物(液化石油气)输送系统 Liquid Transportation Systems for Hydrocarbons (Liquid Petroleum Gas), Anhydrous Ammonla, and Alcohols.
ANSI/ASME B31.8	气体传输和分配管道系统 Gas Transmission and Distribution Piping Systems
ANSI/FCL 70-2-1991	控制阀门阀座泄漏 For Control Valve Seat Leakage
ISA 75.02	关于Cv(阀门尺寸选用系数)，Fp(管道几何系数)，XT(压降范围) Valve Sizing Coefficient Cv, Piping Geometry Factor Fp and Pressure Drop Limitation XT
MSS SP-25	阀门标准标记体系 Standard Marking System for Valves
MSS SP-44	钢制管线法兰 Steel Pipe Line Flanges
MSS SP-55	钢铸件质量标准 Quality Standards for Steel Castings
MSS SP-61	钢阀门压力试验 Pressure Testing of Steel Valves
MSS SP-96	阀门和连接件术语 Terminology for Valves and Fittings

可选用产品标准 Optional products standard

API 598	阀门检验和试验 Valve Inspection and Testing
PED2014/68/EC	压力设备导则 Pressure equipment directive
MSS SP-53	钢铸件和锻件阀门，法兰和连接件和其它管件的质量标准 – 磁粉探伤检验方法 Steel casting and forging valve, the quality standard of flange, connections and other pipe fittings– Magnetic particle Inspection Method
MSS SP-54	阀门，法兰，连接件和其它管件的钢铸件的质量标准–射线检验方法 Quality standards for steel castings for valves, flanges, fittings and other pipe fittings–ray inspection methods
MSS SP-93	阀门，法兰，连接件和其它管件的钢铸件和锻件的质量标准 – 液体渗透方法 Valves, flanges, fittings and other fittings of steel castings and forgings quality standards–liquid permeation method
NACE	用于易腐蚀炼油环境的抗硫化应力裂化材料 For perishable oil refinery Sulfide Stress Cracking Resistant Materials

815W对夹式蝶阀部件材质 815W Wafer Butterfly Valve Material

150Lb 815W对夹式蝶阀
150Lb 815W Wafer butterfly valve

No.	名称 Name	材质 Materail
1	阀体 Body	WCB, CF8, CF8M, CF3M
2	阀板 Plate	CF8, CF8M, CF3M
3	嵌件 Insert	20#, 304, 316, 316L
4	密封圈 Seal ring	PTFE, RPTFE, PPL
5	填料压盖 Packing gland	CF8
6	压圈 Pressing ring	316
7	阀杆 Stem	17-4PH
8	锲销 Pin	17-4PH
9	填料组 Packing group	PTFE, RPTFE, PPL
10	填料垫 Packing seat	316
11	挡圈 Check ring	316
12	上轴套 Upper shaft sleeve	316+RPTFE
13	下轴套 Lower shaft sleeve	316+RPTFE
14	嵌弹簧 Embedded spring	因可镍 INCONEL X-750
15	双头螺栓 Stud	GB3098.18.8级 GB3098.1 A2-70级
16	六角螺母 Hexagonal nut	GB3098.18.8级 GB3098.1 A2-70级
17	弹簧垫圈 Spring washer	WCB, 316
18	铭牌 Sign	316
19	铭牌铆钉 Sign the rivet	316

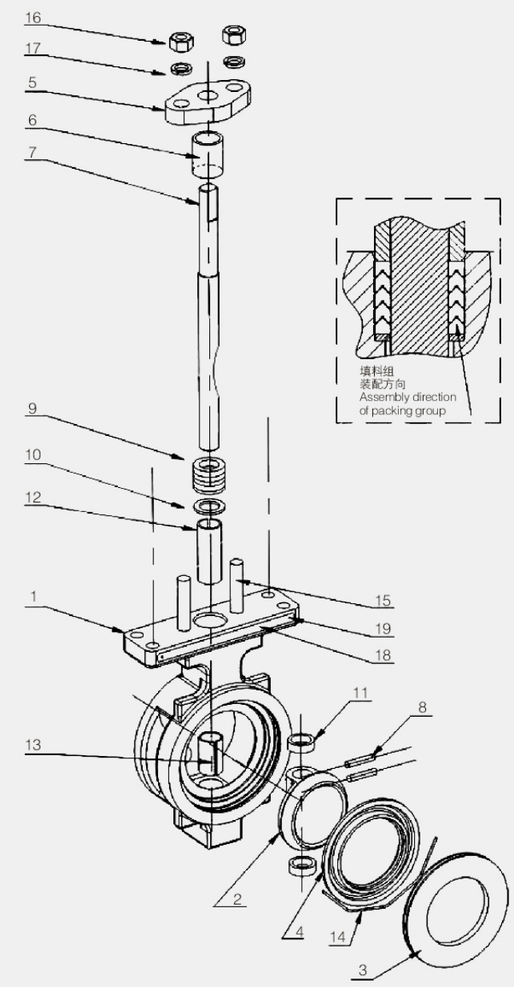

815W对夹式蝶阀 815W Wafer Butterfly Valve

2"~12"(DN50~300) 150磅 815W对夹式蝶阀尺寸
2"~12"(DN50~300) class 150 815W Wafer butterfly valve size

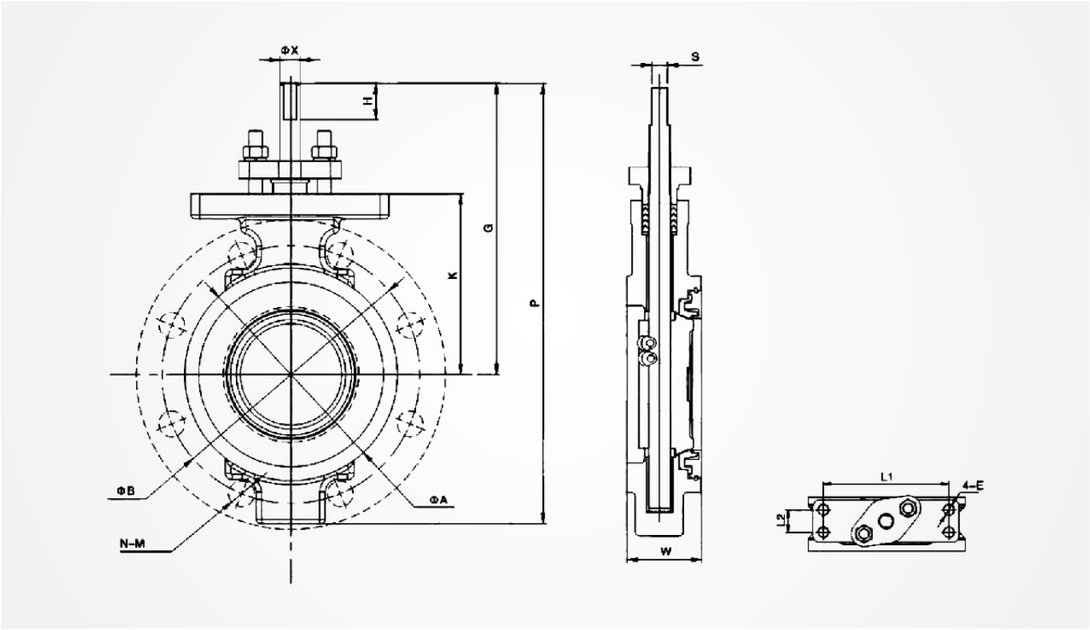

Class 150Lb

尺寸参数 Size parameters															
NPS	DN	K	G	P	W	A	B	L1	L2	E	N	M	H	X	S
2"	50	80	124	186	43	96	120.7	125.5	22.35	M10	4	Φ19	14	Φ11.8	9
21/2"	65	111	193	276	49	118	139.7	125.5	22.35	M10	4	Φ19	27	Φ15.5	11.2
3"	80	121	203	297	49	132	152.4	125.5	22.35	M10	4	Φ19	27	Φ15.5	11.2
4"	100	133	215	325	54	157	190.5	125.5	22.35	M10	8	Φ19	27	Φ15.5	11.2
5"	125	135	217	344	57	186	215.5	125.5	22.35	M10	8	Φ22	27	Φ15.5	11.2
6"	150	152	234	377	57	217	241.3	125.5	22.35	M10	8	Φ22	27	Φ18.8	13.9
8"	200	187	269	441	64	274	298.5	125.5	22.35	M10	8	Φ22	27	Φ21.9	15.9
10"	250	232	325	527	71	330	362	142.75	37.34	M12	12	Φ26	28	Φ28.2	20.6
12"	300	260	357	595	81	386	431.8	142.75	37.34	M12	12	Φ26	33	Φ34.7	23.7

14"~60"(DN350~1500) 150磅 815W对夹式蝶阀尺寸
14"~60"(DN350~1500) class 150 815W Wafer butterfly valve size

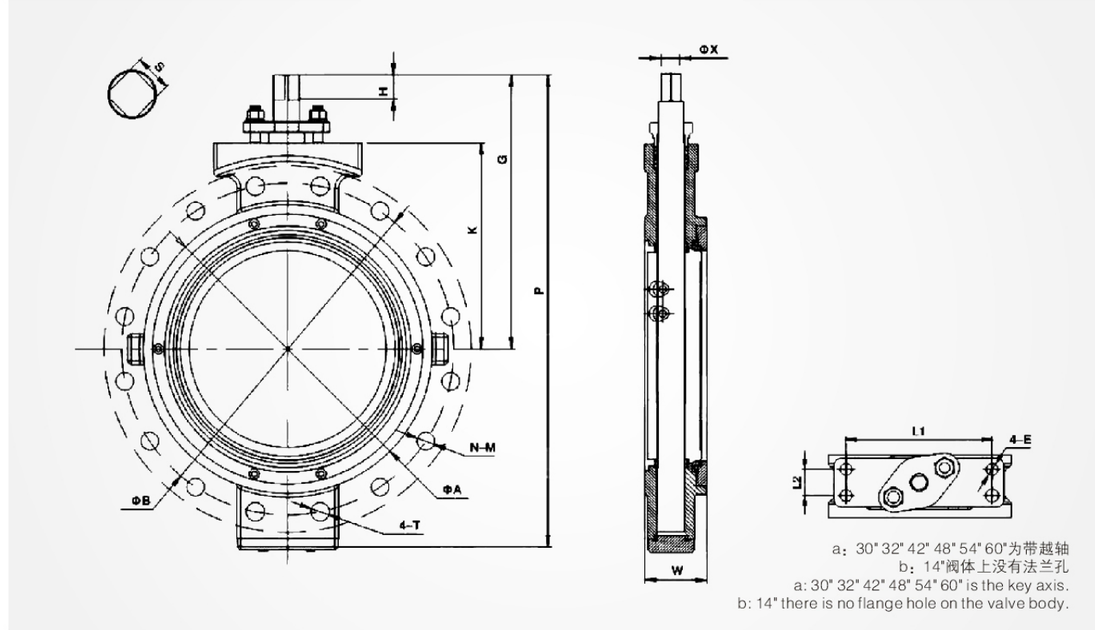

Class 150Lb

尺寸参数 Size parameters																
NPS	DN	K	G	P	W	A	B	L1	L2	E	N	M	T	H	X	S
14"	350	309	397	670	92	425	476.3	142.75	37.34	M12	12	Φ29	b	35	Φ34.93	28.7
16"	400	331	419	719	102	470	539.8	203.2	82.55	M16	16	Φ29	30	41	Φ46	41.4
18"	450	356	449	772	114	533	577.9	203.2	82.55	M16	16	Φ32	33	41	Φ47	41.4
20"	500	377	470	833	127	590	635	203.2	82.55	M16	20	Φ32	M30	4'	Φ54.1	41.4
24"	600	489	604	1058	154	692	749.3	254	82.55	M20	20	Φ35	M33	50.8	Φ70	50.8
28"	700	570	727	1251	165	800	863.6	254	82.55	M20	28	Φ36	M33	50.8	Φ83	51
30"	750	570	783	1307	190	905	914.4	254	107.7	M20	28	Φ36	M33	82	Φ55	a
32"	800	570	783	13107	190	905	977.9	254	107.7	M20	28	Φ42	M39	82	Φ55	a
36"	900	660	794	1395	184	1014	1085.8	254	107.7	M20	32	Φ42	M39	50.8	Φ95	50.8
42"	1050	737	1067	1731	222	1185	1257	330.2	177.8	M20	36	Φ42	M39	a	Φ102	a
48"	1200	845	1130	1953	254	1350	1422	381	177.8	M20	44	Φ42	M39	a	Φ127	a
54"	1350	953	1248	2178	267	1522	1594	381	177.8	M20	44	Φ48	M45	a	Φ152	a
60"	1500	1045	1391	2423	279	1687	1759	381	177.8	M27	52	Φ48	M45	a	Φ52	a

830W对夹式蝶阀部件材质 830W Wafer Butterfly Valve Material

300Lb 830W对夹式蝶阀
300Lb 830W Wafer butterfly valve

No.	名称 Name	材质 Materail
1	阀体 Body	WCB, CF8, CF8M, CF3M
2	阀板 Plate	CF8, CF8M, CF3M
3	嵌件 Insert	20#, 304, 316, 316L
4	密封圈 Seal ring	PTFE, RPTFE, PPL
5	填料压盖 Packing gland	CF8
6	压圈 Pressing ring	316
7	阀杆 Stem	17-4PH
8	锲销 Pin	17-4PH
9	填料组 Packing group	PTFE, RPTFE, PPL
10	填料垫 Packing seat	316
11	挡圈 Check ring	316
12	上轴套 Upper shaft sleeve	316+RPTFE
13	下轴套 Lower shaft sleeve	316+RPTFE
14	底盖垫片 Bottom gasket	Gr15轴承钢 Bearing steel
15	底盖垫片 Bottom gasket	PTFE, RPTFE, PPL
16	底盖 Bottom	WCB, CF8, CF8M
17	底盖螺栓 Bottom bolt	WCB, CF8
18	双头螺栓 Stud	GB3098.18.8级 GB3098.1 A2-70级
19	弹簧垫圈 Spring washer	WCB, 316
20	六角螺母 Hexagonal nut	GB3098.18.8级 GB3098.1 A2-70级
21	嵌件螺栓 Insert bolt	WCB, CF8
22	铭牌 Sign	316
23	铭牌铆钉 Sign the rivet	316

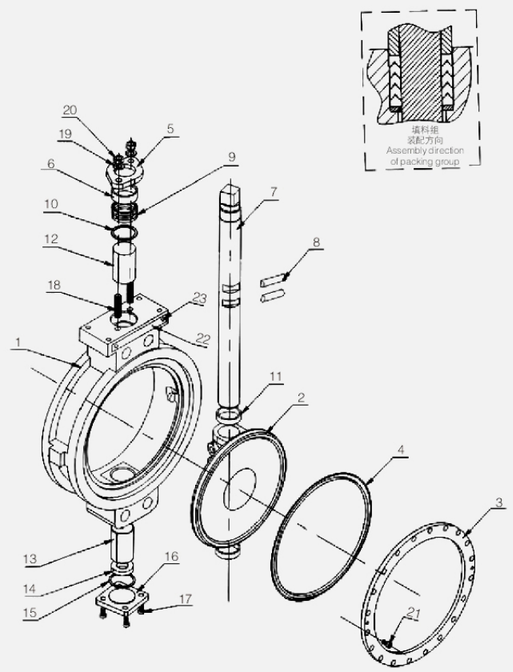

注：
14"口径以上蝶阀
轴承底部安装
止推轴承减少
阀板自重对阀体的磨损，延长使用寿命，减小开关扭矩

Note: The butterfly valve with a diameter of 14"
Bottom mounting of bearing Reduction of thrust bearing.
Valve plate self-weight to valve body wear, extend service life, reduce switch torque.

830W对夹式蝶阀 830W Wafer Butterfly Valve

2"~8"(DN50~200) 300磅 815W对夹式蝶阀尺寸
2"~8"(DN50~200) class 300 815W wafer butterfly valve size

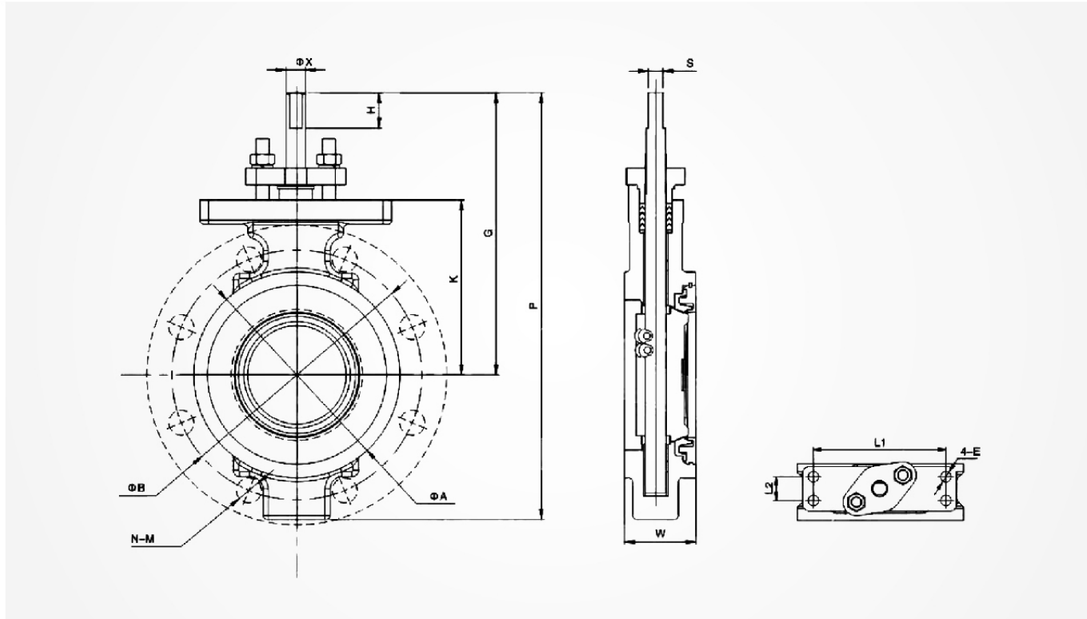

Class 300Lb

尺寸参数 Size parameters															
NPS	DN	K	G	P	W	A	B	L1	L2	E	N	M	H	X	S
2"	50	80	124	186	43	96	127	125.5	22.35	M10	8	Φ19	14	Φ11.8	9
2½"	65	111	193	276	49	118	149.3	125.5	22.35	M10	8	Φ22	27	Φ15.5	11.2
3"	80	121	203	297	49	132	168.3	125.5	22.35	M10	8	Φ22	27	Φ15.5	11.2
4"	100	133	215	325	54	157	200	125.5	22.35	M10	8	Φ22	27	Φ15.5	11.2
5"	125	135	217	344	57	186	235	125.5	22.35	M10	8	Φ22	27	Φ15.5	11.2
6"	150	175	257	410	59	217.5	269.9	125.5	22.35	M10	12	Φ22	27	Φ21.9	15.9
8"	200	213	295	475	73	273	330.2	142.75	34.34	M12	12	Φ26	28	Φ28.2	20.6

10"~24"(DN250~600) 300磅 830W对夹式蝶阀尺寸
10"~24"(DN250~600) class 300 830W wafer butterfly valve size

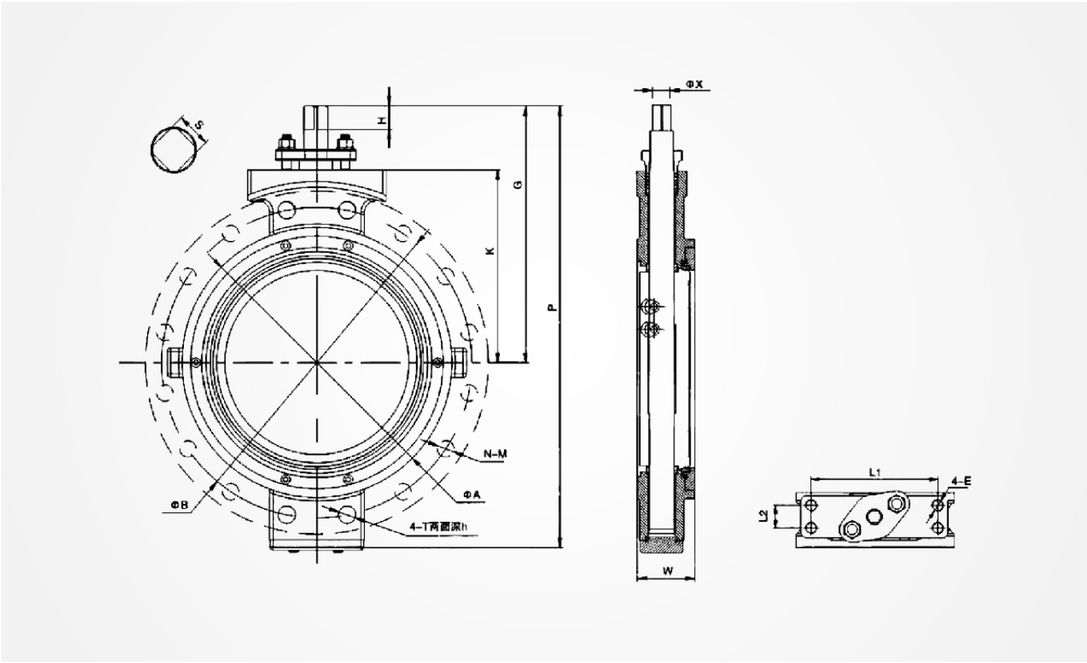

Class 300Lb

尺寸参数 Size parameters																	
NPS	DN	K	G	P	W	A	B	L1	L2	E	N	M	T	h	H	X	S
10"	250	254	347	569	83	327	387.4	142.75	37.34	M12	18	Φ29	M27	通孔 hole	33	Φ34.7	23.7
12"	300	283	380	664	92	385	450.8	142.75	37.34	M12	16	Φ32	M30	通孔 hole	35	Φ34.93	28.7
14"	350	325	413	699	117	445	514.4	203.2	82.55	M14	20	Φ32	M30	28	41	Φ46	41.4
16"	400	350.5	438.5	773.5	133	505	571.5	203.2	82.55	M14	20	Φ35	M33	32	41	Φ47	41.4
18"	450	424.4	517	884	149	550	628.6	254	82.55	M16	24	Φ35	M33	32	41	Φ54.1	41.4
20"	500	447	540	975	159	610	685.8	254	82.55	M20	24	Φ35	M33	32	50.8	Φ70	50.8
24"	600	501	615	1098	181	718	812.8	254	82.55	M20	24	Φ42	M39	38	50.8	Φ83	51

800L凸耳式蝶阀部件材质 800L LUG Type Butterfly Valve Material

150Lb 800L凸耳式蝶阀
150Lb 800L LUG type butterfly valve

No.	名称 Name	材质 Materail
1	阀体 Body	WCB, CF8, CF8M, CF3M
2	阀板 Plate	CF8, CF8M, CF3M
3	嵌件 Insert	20#, 304, 316, 316L
4	密封圈 Seal ring	PTFE, RPTFE, PPL
5	填料压盖 Packing gland	CF8
6	压圈 Pressing ring	316
7	阀杆 Stem	17-4PH
8	锲销 Pin	17-4PH
9	填料组 Packing group	PTFE, RPTFE, PPL
10	填料垫 Packing seat	316
11	挡圈 Check ring	316
12	上轴套 Upper shaft sleeve	316+RPTFE
13	下轴套 Lower shaft sleeve	316+RPTFE
14	嵌弹簧 Embedded spring	因可镍 Inconel X-750
15	双头螺栓 Stud	GB3098.18.8级 GB3098.1 A2-70级
16	六角螺母 Hexagonal nut	GB3098.18.8级 GB3098.1 A2-70级
17	弹簧垫圈 Spring washer	WCB, 316
18	铭牌 Sign	316
19	铭牌铆钉 Sign the rivet	316

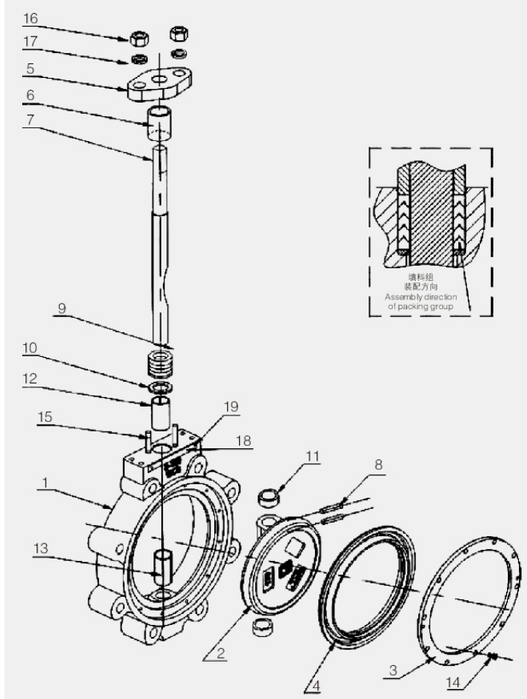

815L凸耳式蝶阀 815L LUG Type Butterfly Valve

2"~12"(DN50~300) 150磅 815L凸耳式蝶阀尺寸
2"~12"(DN50~300) class 150 815L LUG type butterfly valve size

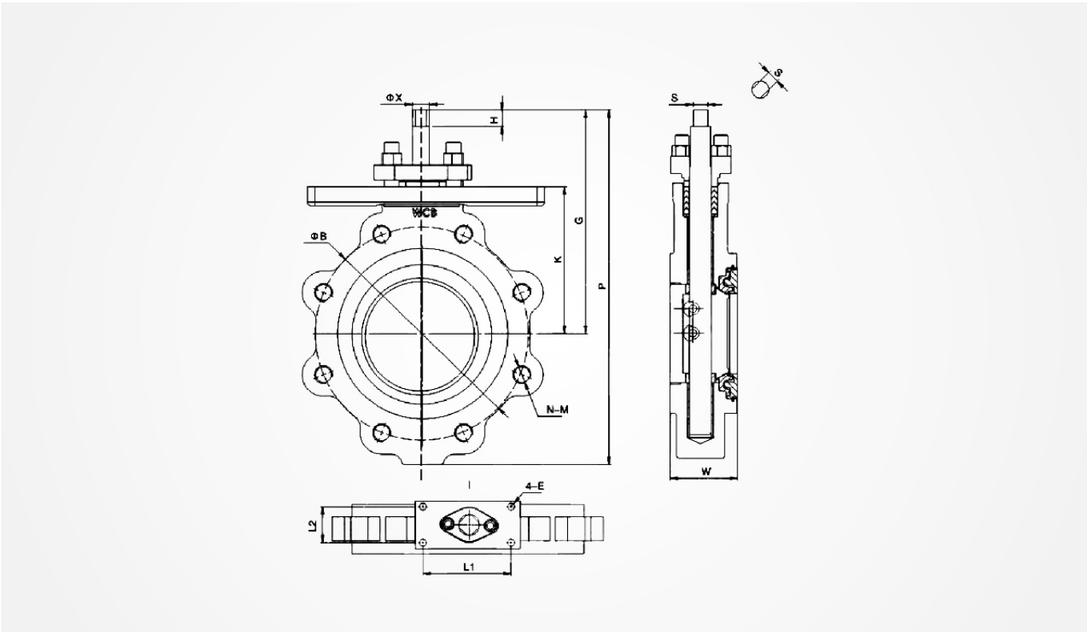

Class 150Lb

尺寸参数 Size parameters														
NPS	DN	K	G	P	W	B	L1	L2	E	N	M	H	X	S
2"	50	80	124	186	43	120.7	125.5	22.35	M10	4	M16	14	Φ11.8	9
2½"	65	111	193	276	49	139.7	125.5	22.35	M10	4	M16	27	Φ15.5	11.2
3"	80	121	203	297	49	152.4	125.5	22.35	M10	4	M16	27	Φ15.5	11.2
4"	100	133	215	325	54	190.5	125.5	22.35	M10	8	M16	27	Φ15.5	11.2
5"	125	135	217	344	57	215.9	125.5	22.35	M10	8	M20	27	Φ15.5	11.2
6"	150	152	234	377	57	241.3	125.5	22.35	M10	8	M20	27	Φ18.8	13.9
8"	200	187	269	441	64	298.5	125.5	22.35	M10	8	M20	27	Φ21.9	15.9
10"	250	232	325	527	71	362	142.75	37.34	M12	12	M24	28	Φ28.2	20.6
12"	300	260	357	595	81	431.8	142.75	37.34	M12	12	M24	33	Φ34.7	23.7

14"~60"(DN350~1500) 150磅 815L凸耳式蝶阀尺寸
14"~60"(DN350~1500) class 150 815L LUG type butterfly valve size

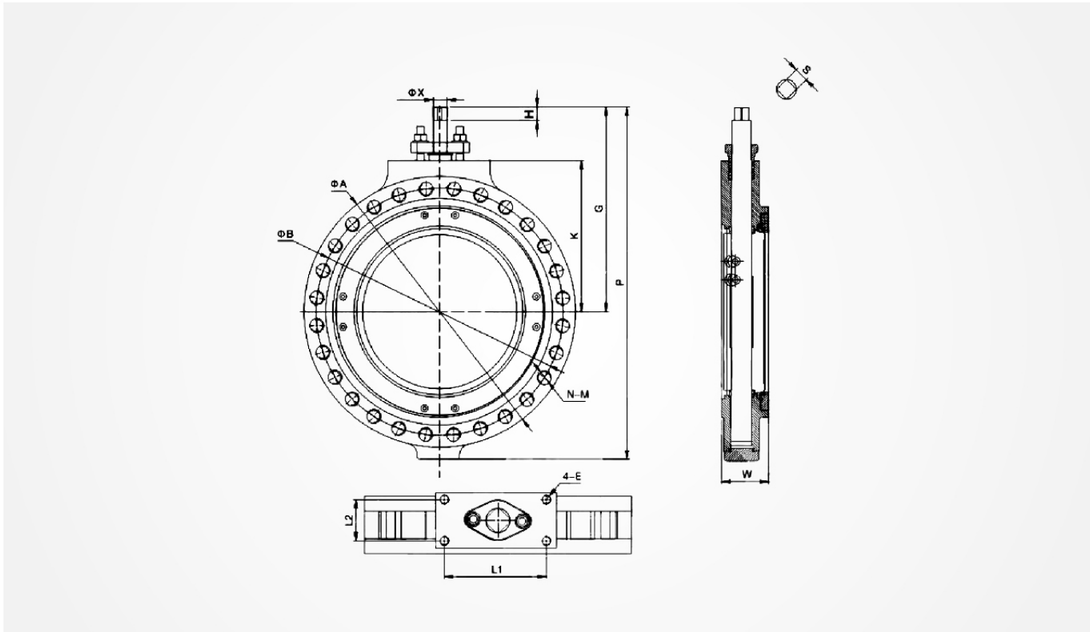

Class 150Lb

尺寸参数 Size parameters															
NPS	DN	K	G	P	W	A	B	L1	L2	E	N	M	H	X	S
14"	350	309	397	670	92	533	476.3	142.75	37.34	M14	12	M27	35	Φ34.9	28.7
16"	400	331	419	719	102	597	539.8	203.2	82.55	M16	16	M27	41	Φ46	41.4
18"	450	356	449	772	114	635	577.9	203.2	82.55	M14	16	M30	41	Φ47	41.4
20"	500	377	470	833	127	699	635	203.2	82.55	M14	20	M30	41	Φ54.1	41.4
24"	600	489	604	1058	154	813	749.3	254	82.55	M20	20	M33	50.8	Φ70	50.8
30"	750	570	783	1307	167	984	91414	254	107.7	M20	28	M33	82	Φ55	a
36"	900	660	794	1395	184	1168	1085.8	254	82.55	M20	32	M39	50.8	Φ95	50.8
42"	1050	737	1067	1731	222	1346	1257	381	177.8	M20	36	M39	a	Φ102	a
48"	1200	845	1130	1953	254	1511	1422	381	177.8	M20	44	M39	a	Φ127	a
54"	1350	953	1248	2178	267	1686	1594	381	177.8	M20	44	M45	a	Φ152	a
60"	1500	1045	1391	2423	279	1854	1759	381	177.8	M27	52	M45	a	Φ152	a

830L凸耳式蝶阀 830L LUG Type Butterfly Valve

2"~8"(DN50~200) 300磅 830L凸耳式蝶阀尺寸
2"~8"(DN50~200) class 300 830L LUG type butterfly valve size

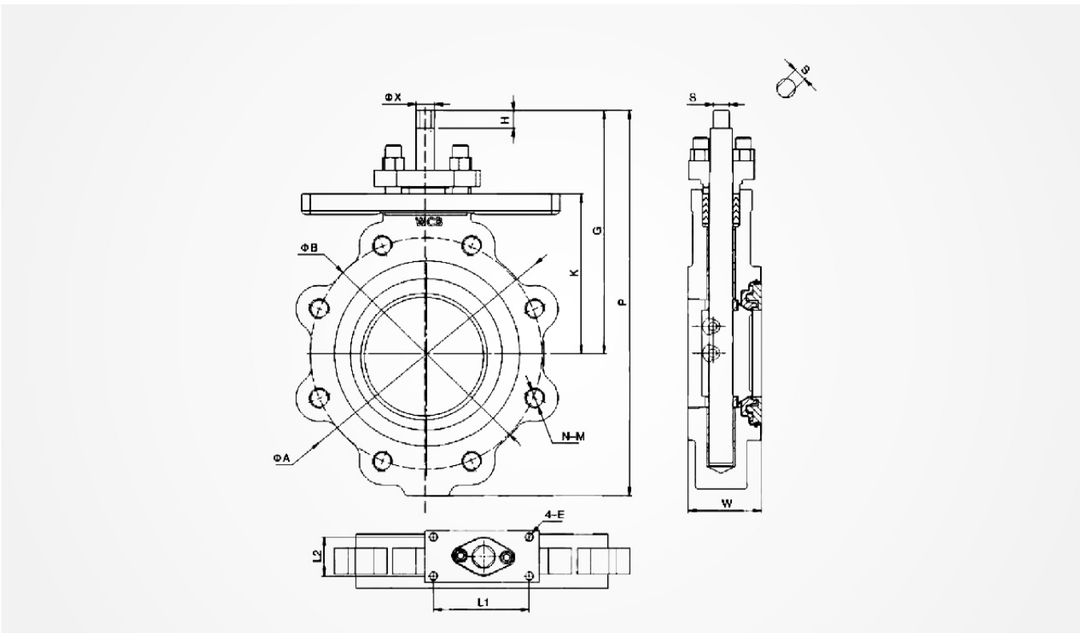

Class 300Lb

尺寸参数 Size parameters														
NPS	DN	K	G	P	W	B	L1	L2	E	N	M	H	X	S
2"	50	80	124	186	43	120.7	125.5	22.35	M10	8	M16	14	Φ11.8	9
2½"	65	111	193	276	49	139.7	125.5	22.35	M10	8	M20	27	Φ15.5	11.2
3"	80	121	203	297	49	152.4	125.5	22.35	M10	8	M20	27	Φ15.5	11.2
4"	100	133	215	325	54	190.5	125.5	22.35	M10	8	M20	27	Φ15.5	11.2
5"	125	135	217	344	57	215.9	125.5	22.35	M10	8	M20	27	Φ15.5	11.2
6"	150	175	257	410	59	269.9	125.5	22.35	M10	12	M20	27	Φ21.9	15.9
8"	200	213	295	475	73	330.2	142.75	37.34	M12	12	M24	28	Φ28.2	20.6

10"~60"(DN250~900) 300磅 815L凸耳式蝶阀尺寸
10"~60"(DN250~900) class 300 815L LUG type butterfly valve size

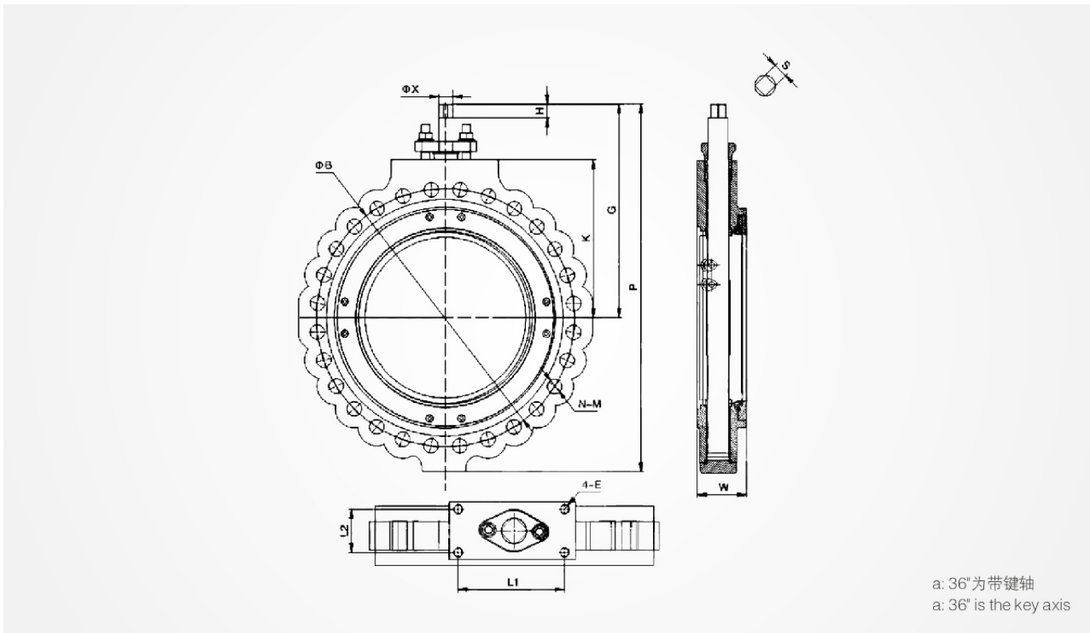

Class 300Lb

尺寸参数 Size parameters														
NPS	DN	K	G	P	W	B	L1	L2	E	N	M	H	X	S
10"	250	254	347	569	83	387.4	142.75	37.34	M12	16	M27	33	Φ34.7	23.7
12"	300	283	380	664	92	450.8	142.75	37.34	M12	16	M30	35	Φ34.93	28.7
14"	350	325	413	699	118	514.4	203.2	82.55	M12	20	M30	41	Φ46	41.4
16"	400	350.5	438.5	773.5	133	571.5	2032	82.55	M14	20	M33	41	Φ47	41.4
18"	450	424	517	884	149	628.6	254	82.55	M16	24	M33	41	Φ54.1	41.4
20"	500	447	540	959	159	685.8	254	82.55	M20	24	M33	50.8	Φ70	50.8
24"	600	501	615	1046	181	812.8	254	82.55	M20	24	M39	50.8	Φ83	51
30"	750	842	922	1549	273	997	381	177.8	M20	28	M45	50.8	Φ95	50.8
36"	900	783	1053	1824	286	1168.4	381	177.8	M20	32	M52	a	Φ102	a

800F双法兰蝶阀部件材质 800F Double Flanged Butterfly Valve Material

150Lb 800F双法兰蝶阀
150Lb 800F Double flanged butterfly valve

No.	名称 Name	材质 Materail
1	阀体 Body	WCB, CF8, CF8M, CF3M
2	阀板 Plate	CF8, CF8M, CF3M
3	嵌件 Insert	20#, 304, 316, 316L
4	密封圈 Seal ring	PTFE, RPTFE, PPL
5	填料压盖 Packing gland	CF8
6	压圈 Pressing ring	316
7	阀杆 Stem	17-4PH
8	锲销 Pin	17-4PH
9	填料组 Packing group	PTFE, RPTFE, PPL
10	填料垫 Packing seat	316
11	挡圈 Check ring	316
12	上轴套 Upper shaft sleeve	316+RPTFE
13	下轴套 Lower shaft sleeve	316+RPTFE
14	嵌弹螺栓Insert bolt	WCB, CF8
15	双头螺栓 Stud	GB3098.18.8级 GB3098.1 A2-70级
16	六角螺母 Hexagonal nut	GB3098.18.8级 GB3098.1 A2-70级
17	弹簧垫圈 Spring washer	WCB, 316
18	铭牌 Sign	316
19	铭牌铆钉 Sign the rivet	316

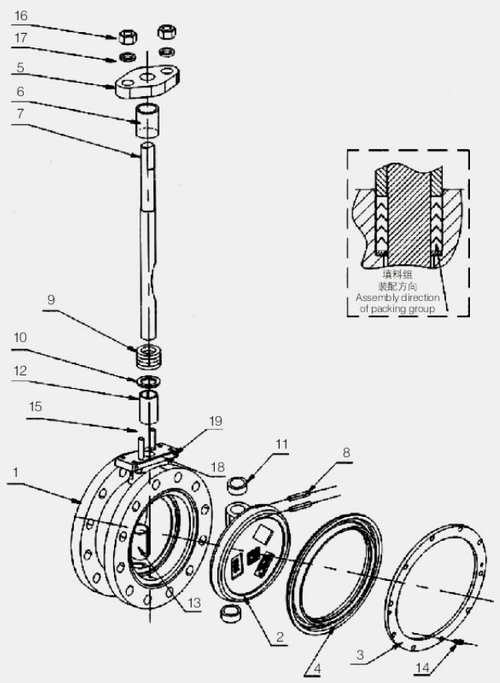

结构说明
该双法兰蝶阀是为适应国内工程安装需要而设计
1. 具有所有双偏心高性能蝶阀的优点
2. 双法兰结构满足现场施工的要求
3. 可以适用于国标PN16，PN25，PN40连接标准

Structure that
The double flange butterfly valve is designed
to meet the needs of domestic engineering installation.
1. Advantages of all double eccentric high performance butterfly valves.
2. Doubleflangestructuremeetsthe requirements of site construction.
3. Applicable to national standard PN16, PN25, PN40 connection standard

815F双法兰蝶阀 815F Double Flanged Butterfly Valve

3"~24"(DN80~600) 150磅 815F双法兰式蝶阀尺寸
3"~24"(DN80~600) class 150 815F Double flanged butterfly valve size

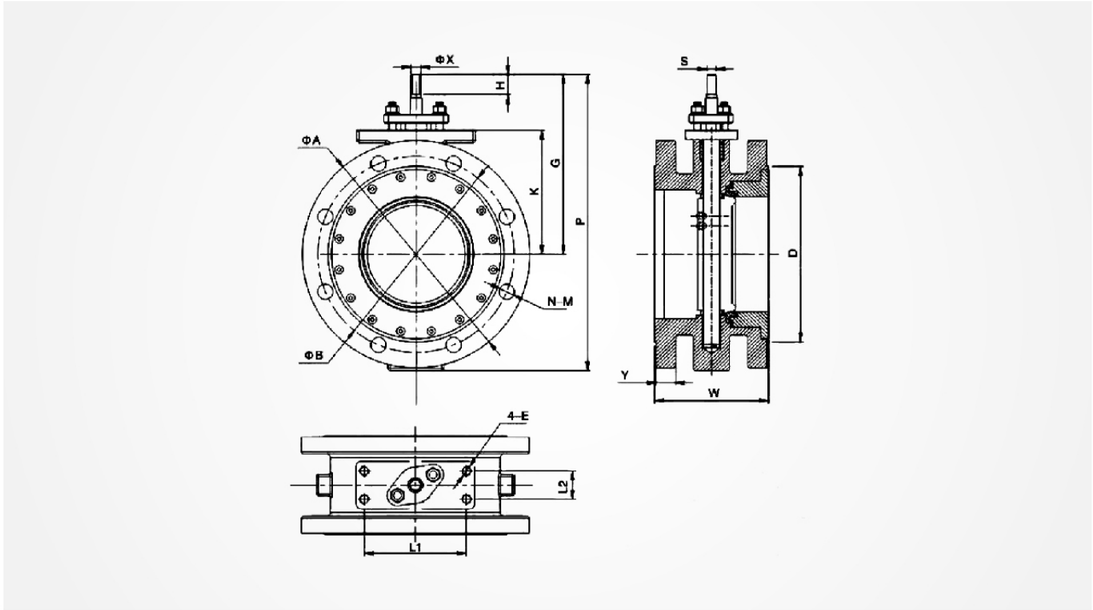

Class 150Lb

尺寸参数 Size parameters																	
NPS	DN	K	G	P	W	A	B	D	Y	L1	L2	E	N	M	H	X	S
3"	80	121	213	303	114	190	152.4	133	23	125.5	22.35	M10	4	Φ19	27	Φ15.5	11.2
4"	100	133	226	331	127	230	190.5	162	20	125.5	22.35	M10	8	Φ19	27	Φ15.5	11.2
5"	125	135	228	355	140	255	215.9	186	22	125.5	22.35	M10	8	Φ22	27	Φ15.5	11.2
6"	150	152	257	417	140	280	241.3	216	23	125.5	22.35	M10	8	Φ22	27	Φ18.8	13.9
8"	200	187	295	485	152	345	298.5	270	23	125.5	22.35	M10	8	Φ22	27	Φ21.9	15.9
10"	250	232	347	569	165	405	362	324	27	142.75	37.34	M12	12	Φ26	28	Φ28.2	20.6
12"	300	260	380	650	178	485	431.8	381	28	142.75	37.34	M12	12	Φ26	33	Φ34.7	23.7
14"	350	309	443	745	190	535	476.3	427	33	142.75	37.34	M12	12	Φ29	35	Φ34.93	28.7
16"	400	331	438.5	773.5	216	595	539.8	485	35	203.2	82.55	M16	16	Φ29	41	Φ46	41.4
18"	450	356	517	884	222	635	577.9	533	37	203.2	82.55	M16	16	Φ32	41	Φ47	41.4
20"	500	377	540	959	229	700	635	584	39	203.2	82.55	M16	20	Φ32	41	Φ54.1	41.4
24"	600	490	615	1046	267	815	749.3	692	41	254	82.55	M20	20	Φ35	50.8	Φ70	50.8

830F双法兰蝶阀 830F Double Flanged Butterfly Valve

3"~24"(DN80~600) 300磅 830F双法兰式蝶阀尺寸
3"~24"(DN80~600) class 300 830F Double flanged butterfly valve size

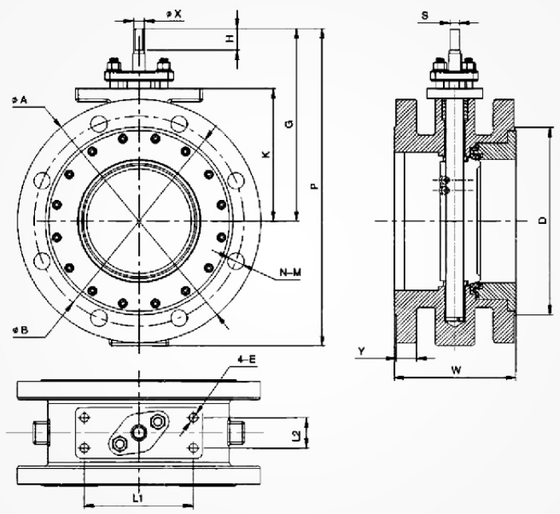

Class 300Lb

尺寸参数 Size parameters																	
NPS	DN	K	G	P	W	A	B	D	Y	L1	L2	E	N	M	H	X	S
3"	80	121	213	303	114	190	152.4	133	23	125.5	22.35	M10	4	Φ19	27	Φ15.5	11.2
4"	100	133	226	331	127	230	190.5	162	20	125.5	22.35	M10	8	Φ19	27	Φ15.5	11.2
5"	125	135	228	355	140	255	215.9	186	22	125.5	22.35	M10	8	Φ22	27	Φ15.5	11.2
6"	150	175	257	417	140	300	269.9	216	30	125.5	22.35	M10	12	Φ22	27	Φ21.9	15.9
8"	200	213	295	485	152	375	330.2	270	33	142.75	37.34	M12	12	Φ26	28	Φ28.2	20.6
10"	250	254	347	569	165	450	387.4	324	38	14275	37.34	M12	16	Φ29	33	Φ34.7	23.7
12"	300	283	380	650	178	515	450.8	381	40	142.75	37.34	M12	18	Φ32	35	Φ34.93	28.7
14"	350	355	443	745	190	580	514.4	427	42	142.75	37.34	M12	20	Φ32	41	Φ46	41.4
16"	400	350.5	438.5	773.5	216	660	571.5	485	44	203.2	82.55	M14	20	Φ35	41	Φ47	41.4
18"	450	424	517	884	222	685	628.6	533	46	254	82.55	M16	24	Φ35	41	Φ54.1	41.4
20"	500	447	540	959	229	755	885.8	584	48	254	82.55	M20	24	Φ35	50.8	Φ70	50.8
24"	600	501	615	1046	267	890	812.8	692	50	254	82.55	M20	24	Φ42	50.8	Φ83	51

800G高平台对夹式蝶阀部件材质 800G High Platform Wafer Type Butterfly Valve Material

150Lb 800G高平台对夹式蝶阀
150Lb 800G high platform wafer type butterfly valve

No.	名称 Name	材质 Materail
1	阀体 Body	WCB, CF8, CF8M, CF3M
2	阀板 Plate	CF8, CF8M, CF3M
3	密封圈 Seal ring	PTFE, RPTFE, PPL
4	嵌弹簧 Embedded spring	因可镍 Inconel X-750
5	嵌件 Insert	20#, 304, 316, 316L
6	挡圈 Check ring	316
7	锲销 Pin	17-4PH
8	阀杆 Stem	17-4PH
9	上轴套 Upper shaft sleeve	316+RPTFE
10	下轴套 Lower shaft sleeve	316+RPTFE
11	填料垫 Packing seat	316
12	填料组 Packing group	PTFE, RPTFE, PPL
13	填料压盖 Packing gland	CF8
14	底盖螺栓 Bottom bolt	WCB, CF8
15	压盖螺母 Gland nut	WCB, CF8
16	六角螺母 Hexagonal nut	GB3098.18.8级 GB3098.1 A2-70级
17	弹簧垫圈 Spring washer	WCB, 316

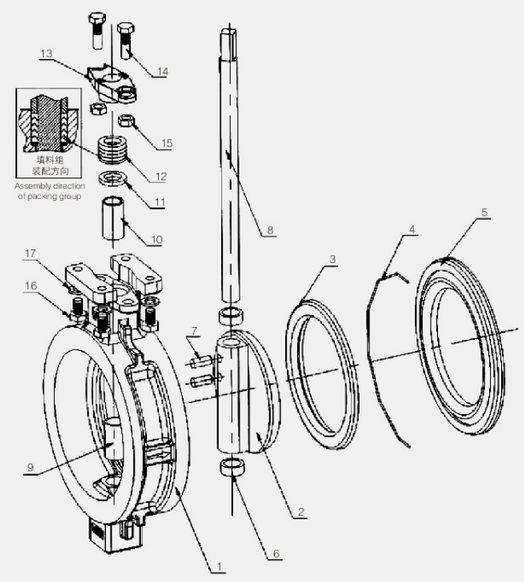

特点

1. 该系列产品符合ISO 5211的平台安装标准，可直接安装各种执行机构，快捷方便，节省安装支架费用和安装空间。

The characteristics of

1. This series of products conforms to the ISO5211 platform installation standard, which can be directly installed with various actuators, which is convenient and convenient, saving the installation cost and installation space.

815GW高平台对夹式蝶阀 815GW High Platform Wafer Type Butterfly Valve

2"~12"(DN50~300) 150磅 815GW高平台对夹式蝶阀尺寸
2"~12"(DN50~300) class 150 815GW high platform wafer typebutterfly valve

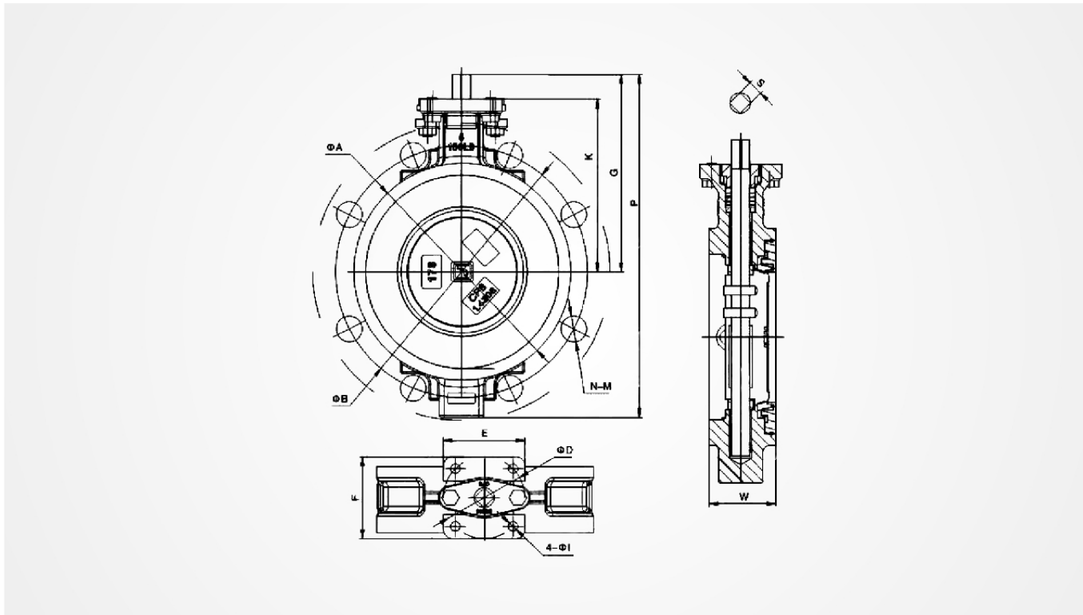

Class 150Lb

尺寸参数 Size parameters														
NPS	DN	K	G	P	W	A	B	E	F	D	I	N	M	S
2"	50	98	110	174	43	96	120.7	55	55	50	6	4	Φ19	9*9
2½"	65	112	128	210	49	120	139.7	70	70	70	8	4	Φ19	11*11
3"	80	122	140	230	49	131	152.4	70	70	70	8	4	Φ19	11*11
4"	100	135	154	259	54	155	190.5	70	70	70	8	8	Φ19	11*11
5"	125	148	168	293	64	186	215.9	70	70	70	8	8	Φ22	11*11
6"	150	168	192	325	57	216	241.3	102	102	102	10	8	Φ22	14*14
8"	200	199	224	396	64	270	298.5	102	102	102	10	8	Φ22	17*17
10"	250	232	262	464	71	320	362	120	120	125	12	12	Φ26	22*22
12"	300	269	301	538	81	380	431.8	120	120	125	12	12	Φ26	27*27

14"~24"(DN350~600) 150磅 815GW高平台对夹式蝶阀尺寸
14"~24"(DN350~600) class 150 815GW high platform wafer typebutterfly valve

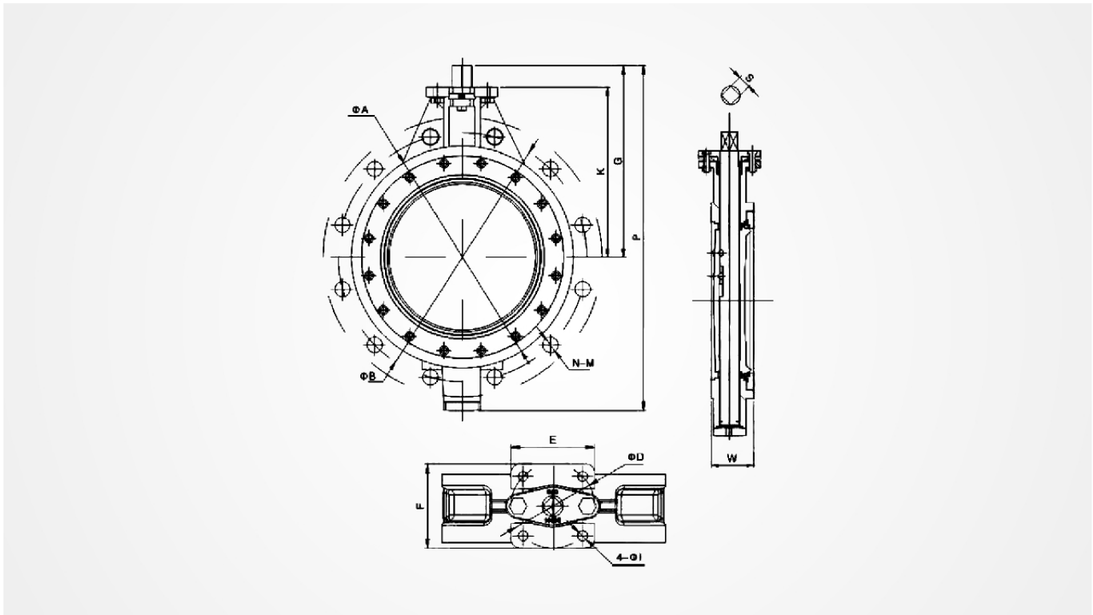

Class 150Lb

尺寸参数 Size parameters														
NPS	DN	K	G	P	W	A	B	E	F	D	I	N	M	S
14"	350	328	366	696.5	92	425	476.3	136	136	125/140	Φ16	12	Φ29	27*27
16"	400	353	391	691	102	470	539.8	136	136	125/140	Φ16	16	Φ29	36*36
18"	450	380	428	758	114	533	577.9	170	170	140/165	Φ20	16	Φ32	36*36
20"	500	440	488	858	127	584	635	180	180	165	Φ20	20	Φ32	46*46
24"	600	515	563	1013	154	692	749.3	200	200	165	Φ20	20	Φ35	46*46

高平台蝶阀与AT气缸配比表
High Platform Butterfly Valve And AT Cylinder Ratio Table

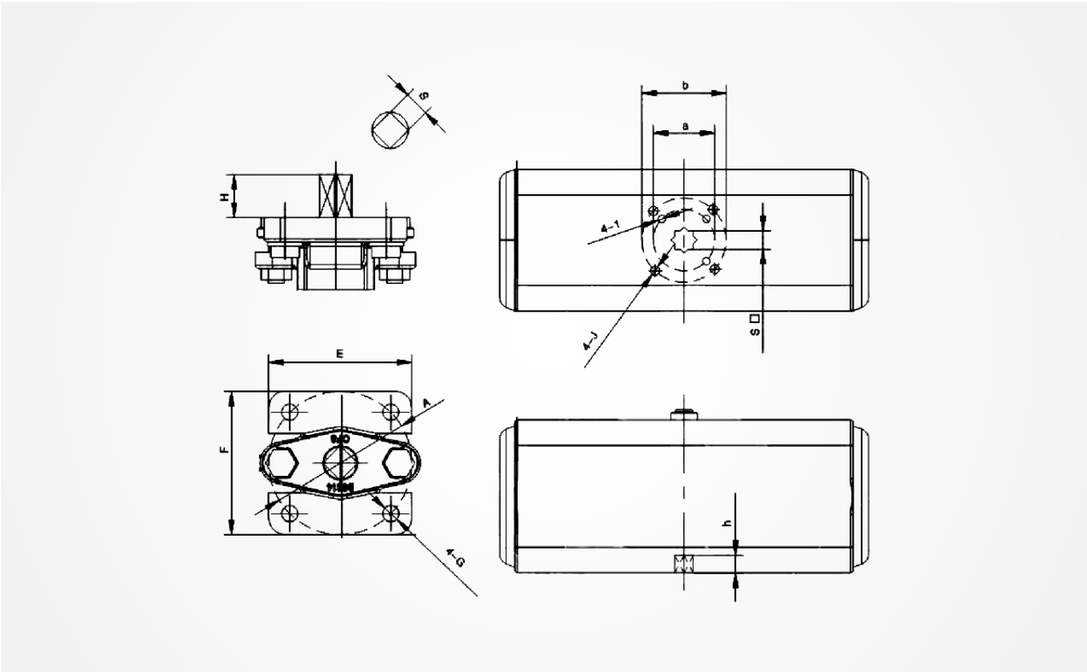

高平台蝶阀阀门High platform butterfly valve							执行器 Actuator						
NPS	型号 Model	A	E×F	G	H	S	型号 Model	a	b	I	J	h	s
2"	F05	Φ50	55×55	Φ6	12	9×9	AT-52	36	50	M5	M6	14	11×11
2½"	F07	Φ70	70×70	Φ8	16	11×11	AT-63	50	70	M6	M8	18	14×14
3"	F07	Φ70	70×70	Φ8	18	11×11	AT-75	50	70	M6	M8	20	14×14
4"	F07	Φ70	70×70	Φ8	19	11×11	AT-83	50	70	M6	M8	21	17×17
5"	F07	Φ70	70×70	Φ8	20	11×11	AT-92	50	70	M6	M8	22	17×17
6"	F10	Φ102	102×102	Φ10	24	14×14	AT-105	70	102	M8	M10	26	22×22
8"	F10	Φ102	102×102	Φ10	25	17×17	AT-125	70	102	M8	M10	27	22×22
10"	F12	Φ125	120×120	Φ12	30	22×22	AT-140	102	125	M10	M12	32	27×27
12"	F12	Φ125	120×120	Φ12	32	27×27	AT-160	102	125	M10	M12	34	27×27
14"	F14	Φ140	136×136	Φ16	38	27×27	AT-190	50	140	M6	M16	40	36×36
16"	F14	Φ140	136×136	Φ16	38	36×36	AT-210	70	140	M8	M16	40	36×36
18"	F14	Φ165	170×170	Φ20	48	36×36	AT-210	70	140	M8	M16	40	36×36
20"	F16	Φ165	180×180	Φ20	48	46×46	AT-240	70	165	M8	M20	50	46×46
24"	F16	Φ165	200×200	Φ20	48	46×46	AT-240	70	165	M8	M20	50	46×46

800系列对夹式蝶阀订购须知
How to order Series 800 clip-on butterfly valve

如有可能，在订购时按下列说明的代码写明阀门型号。例如：要订购6"150级对夹式蝶阀，碳钢阀体，驱动方式为气动，使用CF8蝶板和17-4PH轴，PTFE密封座和PTFE轴密封。

If possible, specify the valve model in the code below. For example: to order 6" type class 150 dual butterfly valve, carbon steel body, drive mode for pneumatic, use CF8 butterfly plate and 17-4PH axis, PTFE seal seat and PTFE shaft seal.

1	2	3	4	5	6	7	8
6"(DN 150)	815	W	P	11	22	3443	MT

应写为：6" (DN150) 815W-P-11-223443TT.

订购时请写明口径 Please specify the aperture when ordering.

1	阀门尺寸 Valve size*
NPS	2"~60"
DN	50~1500

2	压力级 Pressure Class	2	压力级 Pressure Class
815	标准150级 Standard Class 150	816	GB 16kg
F815	150级耐火型 Fire-Tight Class 150	840	GB 40kg
830	标准300级 Standard Class 300		
F830	300级耐火型 Fire-Tight Class 300		

3	阀体形式 Body style
W	对夹式 Clip-on
L	带凸耳单法兰 Single-flange lugged
F	双法兰式 Double flanged
G	高平台式 High platform

4	操作形式和特殊用途 Operating methods and special service
M	手柄操作 Handle operation
G	蜗轮操作 Turbine operation
P	气动 Pneumatic
PB	气动防爆 Pneumatic anti-explosion
D	电动 Electric
DB	电动防爆 Electric anti-explosion
D	双道填料Double packing
DL	双道填料带检测孔 Double packing with monitoring port

5	阀座形式 Seat type
11	标准(非耐火) Standard (non fire-tight)
31	耐火型 Fire-tight

6	阀体材料 Body material
21	铁球，仅2"~12" 815W和830L Iron ball is 2"~12" 815W and 830L only

22	碳钢 Carbon steel
34	304不锈钢 Stainless steel
39	304L不锈钢 Stainless steel
35	20号合金 Alloy
36	316不锈钢 Stainless steel
6E	316L不锈钢 Stainless steel
37	317不锈钢 Stainless steel
71	蒙乃尔 Monel
73	哈氏合金C Hastelloy C

7	蝶板与轴 Butterfly Disc and axis
1443	铝青铜蝶板与17-4PH轴 Aluminium bronze butterfly disc, 17-4PH shaft
3443	304不锈钢蝶板与17-4PH 304 stainless steel butterfly disc, 17-4PH
3943	304L不锈钢蝶板与17-4PH 304L stainless steel butterfly disc, 17-4PH
3643	316不锈钢蝶板与17-4PH 316 stainless steel butterfly disc, 17-4PH
6E43	316L不锈钢蝶板与17-4PH 316L stainless steel butterfly disc, 17-4PH
3500	20号合金蝶板与轴 Alloy 20 butterfly disc, shaft
3600	316不锈钢蝶板与轴 316 stainless steel butterfly disc, shaft
3700	317不锈钢蝶板与轴 317 stainless steel butterfly disc, shaft
7100	蒙乃尔蝶板与轴 Monel butterfly disc, shaft
7300	哈氏合金C Hastelloy C

8	阀座材料和密封材料 Seat and Seal Material
	标准 Standard
	PTFE阀座和密封 PTFE seat and seal
	增强PTFE阀座，PTFE密封 Filled PTFE seat, PTFE seal
	超高分子量PTL阀座和增加PTFE密封 UHMW polyethylene seat and seal
	PEEK阀座和增强的PTFE密封 PEEKIC seat and enhanced PTFE seal
	耐火型 Fire-tight
	PTFE/不锈钢阀座，石墨密封 PTFE/Stainless steel seat, graphite seal
	PTFE/20合金阀座，石墨密封 PTFE/Alloy 20 seat, graphite seal